UM1653
User manual

STM32 Advanced NAND Flash Driver for SLC NAND

Introduction

The NAND driver library for STM32 is a generic library from which STM32 can access NAND with advanced features like garbage collection, wear leveling, bad block management, ECC checking etc.

The NAND Flash driver supports dynamic NAND Flash detection based on the Device ID. The driver automatically detects the mounted SLC NAND Flash and works accordingly (described in more detail in Section 2.8). This solution runs on the STM32F1, STM32F2 & STM32F4 series of microcontrollers using the FSMC interface.

The board can run in two modes: USB Mass Storage mode and Standalone mode.

- In USB Mass Storage mode, the NAND Flash works as USB mass storage media.
- In Standalone mode, the .bmp images stored in the 'pics' folder of the root directory are read using FatFS file system, and displayed on the onboard TFT LCD.

Six evaluation boards are available for this SLC NAND FLASH Driver:

- STEVAL_CCM006V1: USB mass storage mode demo using STM32F103ZET6
- STEVAL_CCM006V2: Standalone mode demo using STM32F103ZET6
- STEVAL_CCM007V1: USB Mass Storage mode Demo using STM32F205ZET6
- STEVAL_CCM007V2: Standalone mode Demo using STM32F205ZET6
- STEVAL_CCM008V1: USB Mass Storage mode Demo using STM32F405ZGT6
- STEVAL_CCM008V2: Standalone mode Demo using STM32F405ZGT6

NAND is a non-volatile Flash memory device where address lines are multiplexed with data input/output and commands input. The NAND driver library has the following features:

1. Supports both FAT file system and USB MSC device.
2. Supports SLC NAND with page size of 512 Bytes & 2 KBytes.
3. Garbage collection.
4. Wear leveling.
5. Bad block management.
6. ECC check.

This document applies to the following microcontrollers:

- STM32L151xD, STM32L152xD, STM32L1562xD.
- STM32F405/415, STM32F407/417, STM32F427/437, STM32F429/439 lines.
- STM32F2 Series.
- STM32F103xC, STM32F103xD and STM32F103xE, STM32F103xF, STM32F103xG, STM32F101xC, STM32F101xD and STM32F101xE, STM32F101xF, STM32F101xG, STM32F100xC, STM32F100xD, STM32F100xE.

Contents

1 STM32 NAND driver blocks 6

1.1 STM32 USB peripheral 6

1.2 USB mass storage 7

1.3 FSMC 8

1.4 NAND architecture 9

1.5 NAND pin mapping 10

2 NAND driver firmware modules 11

2.1 Garbage collection 11

2.2 Wear leveling 11

2.3 ECC 14

2.3.1 Hamming code for NAND Flash 14

2.3.2 Error detection and correction 16

2.4 Bad block management 17

2.5 Look up table (LUT) 17

2.6 File system 17

2.7 NAND driver files 19

2.7.1 nand_drv.c, nand_drv.h functions 19

2.7.2 fsmc_nand_if.c, fsmc_nand_if.h functions 28

2.8 Supported NAND Flash 34

3 NAND evaluation board 35

3.1 Working with evaluation boards 35

3.1.1 Running in USB Mass Storage mode (STEVAL-CCM006/7/8V1) 36

3.1.2 Running in Standalone mode (STEVAL-CCM006/7/8V2) 37

3.2 Schematics 38

3.3 NAND evaluation board images 43

4 Revision history 44

List of tables

Table 1. Spare area format for small NAND Flash . . . 9
Table 2. Spare area format for large NAND Flash . . . 9
Table 3. File system interface functions . . . 17
Table 4. NAND_Init . . . 19
Table 5. NAND_Write . . . 19
Table 6. NAND_Read . . . 19
Table 7. NAND_WriteECC . . . 20
Table 8. NAND_PostWriteECC . . . 20
Table 9. NAND_CleanLUT . . . 20
Table 10. NAND_WearLeveling . . . 20
Table 11. SBLK_NAND_WearLeveling . . . 21
Table 12. LBLK_NAND_WearLeveling . . . 21
Table 13. NAND_GetFreeBlock . . . 21
Table 14. SBLK_NAND_ReadSpareArea . . . 21
Table 15. LBLK_NAND_ReadSpareArea . . . 21
Table 16. WriteSpareArea . . . 22
Table 17. NAND_Copy . . . 22
Table 18. NAND_CopyBack . . . 22
Table 19. NAND_Format . . . 23
Table 20. NAND_PostWrite . . . 23
Table 21. SBLK_NAND_PostWrite . . . 23
Table 22. LBLK_NAND_PostWrite . . . 23
Table 23. NAND_GarbageCollection . . . 24
Table 24. NAND_UpdateWearLevelCounter . . . 24
Table 25. NAND_ConvertPhyAddress . . . 24
Table 26. NAND_BuildLUT . . . 24
Table 27. SBLK_NAND_BuildLUT . . . 25
Table 28. LBLK_NAND_BuildLUT . . . 25
Table 29. GetParity . . . 25
Table 30. Swap . . . 25
Table 31. WritePage . . . 26
Table 32. SBLK_NAND_WritePage . . . 26
Table 33. LBLK_NAND_WritePage . . . 26
Table 34. ReadPage . . . 27
Table 35. SBLK_NAND_ReadPage . . . 27
Table 36. LBLK_NAND_ReadPage . . . 27
Table 37. BitCount . . . 27
Table 38. FSMC_SelectNANDType . . . 28
Table 39. FSMC_NAND_NON_ONFI_Compliance . . . 28
Table 40. FSMC_NAND_Init . . . 28
Table 41. FSMC_NAND_ReadID . . . 28
Table 42. FSMC_NAND_WriteSmallPage . . . 29
Table 43. FSMC_NAND_ReadSmallPage . . . 29
Table 44. FSMC_NAND_WriteSpareArea . . . 30
Table 45. FSMC_NAND_ReadSpareArea . . . 30
Table 46. FSMC_NAND_EraseBlock . . . 30
Table 47. FSMC_NAND_Reset . . . 31
Table 48. FSMC_NAND_GetStatus . . . 31

Table 49. FSMC_SBLK_NAND_CopyBack 31
Table 50. FSMC_LBLK_NAND_CopyBack 32
Table 51. FSMC_NAND_ReadStatus. 32
Table 52. FSMC_NAND_AddressIncrement 32
Table 53. FSMC_NAND_ONFI_Compliance 32
Table 54. FSMC_SBLK_NAND_SendAddress. 33
Table 55. FSMC_LBLK_NAND_SendAddress 33
Table 56. Supported NAND Flash 34
Table 57. NAND Flash driver file code size 34
Table 58. Document revision history 44

List of figures

Figure 1. Application architecture 6
Figure 2. BOT protocol architecture 7
Figure 3. NAND block architecture 9
Figure 4. Flow of wear leveling mechanism for STEVAL-CCM006V1 12
Figure 5. Flow of wear leveling mechanism for STEVAL-CCM007V1/ 008V1 13
Figure 6. Example of decomposition of a data packet 15
Figure 7. Flow chart for error detection and correction 16
Figure 8. Flow chart for bad block management 17
Figure 9. Flow chart for File System 18
Figure 10. Evaluation board: top side 35
Figure 11. Evaluation board: bottom side 36
Figure 12. Demo running in Standalone mode 37
Figure 13. Microcontroller schematic 38
Figure 14. USB Full Speed schematic 38
Figure 15. USB High Speed schematic 39
Figure 16. Touch Screen schematic 39
Figure 17. TFT Connector schematic 40
Figure 18. Power schematic 40
Figure 19. NAND Flash schematic 41
Figure 20. NAND Flash Signals schematic 42
Figure 21. JTAG schematic 42
Figure 22. Top side of PCB 43
Figure 23. Bottom side of PCB 43

1 STM32 NAND driver blocks

This document describes how to connect a NAND Flash device to an STM32 family microcontroller and communicate using FSMC. NAND driver library for STM32 is a generic library where STM32 can access NAND with some advanced features like garbage collection, wear leveling, bad block management, ECC checking etc. The library supports both FAT file system and USB MSC device.

Figure 1. Application architecture

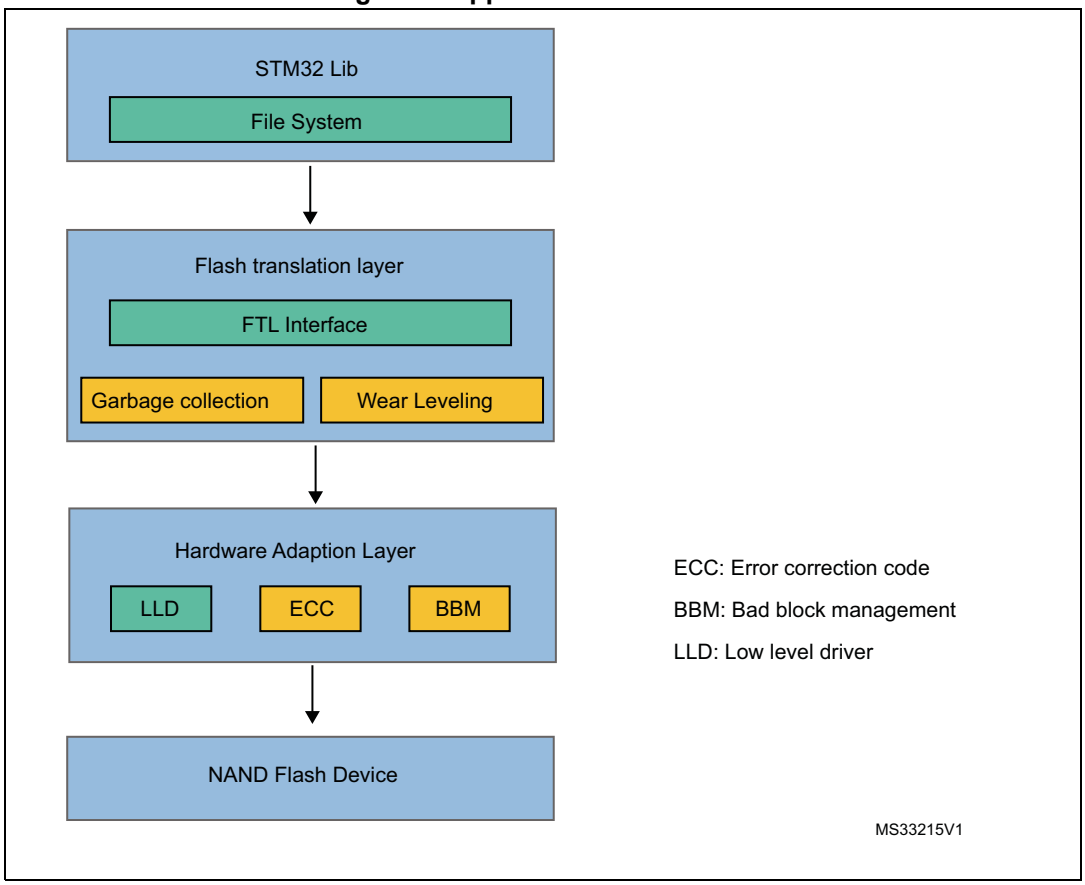

1.1 STM32 USB peripheral

The STM32F embeds a USB peripheral that supports USB full-speed and high speed. The development of Endpoint and support suspend / resume are configured by software. The USB device provides a connection between the host and the function implemented by the microcontroller.
Data transfer between the host and the memory system is through a dedicated packet buffer memory accessed directly from the USB device. The size of buffer memory is dependent on the number of endpoints used and the maximum packet size. This dedicated memory is 512 bytes.

1.2 USB mass storage

The USB device is provided to the host as a particular class, which determines how the host cross reacts with the embedded system.

In our case, the USB device must appear in the driver as a Mass Storage Class USB, which defines that SCSI commands will be used with the protocol “bulk-only transport” (BOT).

Bulk-only-transport (BOT)

A general BOT transaction is based on a simple basic state machine. It begins with ready state (idle state) and if a CBW is received from the host three cases can be managed:

- DATA-OUT-STAGE: when direction flag is set to 0, Device shall prepare itself to receive an amount of data indicated in dCBWDataTransferLength in the CBW block. At the end of data transfer a CSW is returned with the remaining data length and the STATUS field.
- DATA-IN-STAGE: when direction flag is set to 1, Device shall prepare itself to send an amount of data indicated in dCBWDataTransferLength in the CBW block. At the end of data transfer a CSW is returned with the remaining data length and the STATUS field.
- ZERO DATA: no data stage is needed so CSW block is sent immediately after CBW.

The BOT transport protocol encapsulates SCSI commands and transfers them in three steps:

1. Send the command block CBW.
2. Transfer data.
3. Return the status of the block CSW.

Figure 2. BOT protocol architecture

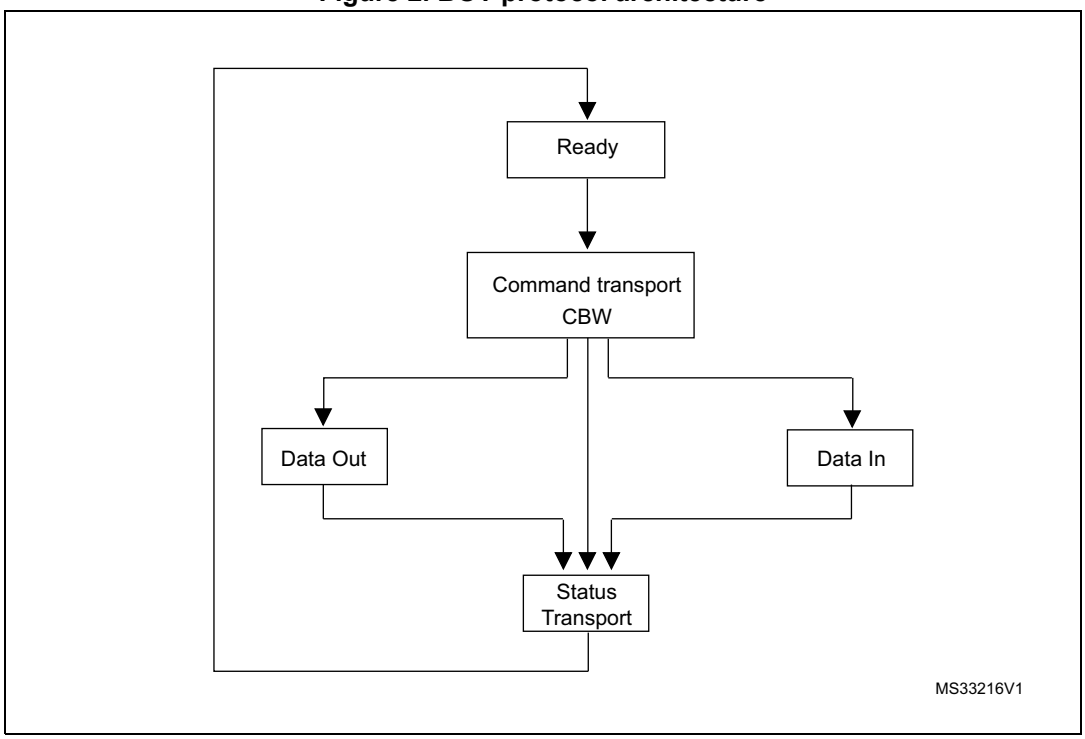

Bulk-Only Transport State machine

```
#define BOT_IDLE                  0           //Idle state
#define BOT_DATA_OUT              1           //Data Out state
#define BOT_DATA_IN               2           //Data In state
#define BOT_DATA_IN_LAST          3           //Last Data In Last
#define BOT_CSW_Send              4           //Command Status Wrapper
#define BOT_ERROR                 5           //error state

#define BOT_CBW_SIGNATURE         0x43425355  //1st 4 bytes of CBW pkt
#define BOT_CSW_SIGNATURE         0x53425355  //1st 4 bytes of CSW pkt

#define BOT_CBW_PACKET_LENGTH     31
#define CSW_DATA_LENGTH           13

 CSW Status Definitions
#define CSW_CMD_PASSED            0x00
#define CSW_CMD_FAILED            0x01
#define CSW_PHASE_ERROR           0x02

#define SEND_CSW_DISABLE          0
#define SEND_CSW_ENABLE           1

#define DIR_IN                    0
#define DIR_OUT                   1
#define BOTH_DIR                  2
```

1.3 FSMC

The FSMC block is able to communicate with the synchronous and asynchronous memory. Its main purpose is to:

- Translate the AHB protocol transactions of external devices
- Respect the access time of external devices

The FSMC provides a single access to an external device.

The FSMC has four blocks:

- AHB Interface
- Controller NOR Flash / PSRAM
- Controller NAND Flash / PC Card
- Interface to external device

The FSMC generates the appropriate signals to drive the NAND Flash memory.

The FSMC controller consists of two blocks of code error correction hardware. They reduce the workload on the host processor when processing code error correction by the system software. These two blocks are identical and are respectively associated with banks 2 and 3. The ECC algorithm used in the FSMC can perform 1- and 2-bit error detection.

1.4 NAND architecture

NAND is a non-volatile Flash memory device where address lines are multiplexed with data input/output as well as with commands input.

- NAND Flash consists of a number of blocks. Each block consists of a number of pages, typically 32 or 64.
- Pages can be written individually, one at a time. When writing to a page, bits can only be written from 1 to 0.
- The erase operation is done by block. Erase operation makes all the memory bits of all the pages in the block to logical 1.

The small NAND Flash contains 528-byte pages (512 data area and 16 byte spare area).

The page size for 2K NAND is 2112 (2048 data and 64 spare area).

The page size for 4K NAND is 4224 (4096 data and 128 spare area).

The page size for 8K NAND is 8448 (8192 data and 256 spare area).

Figure 3. NAND block architecture

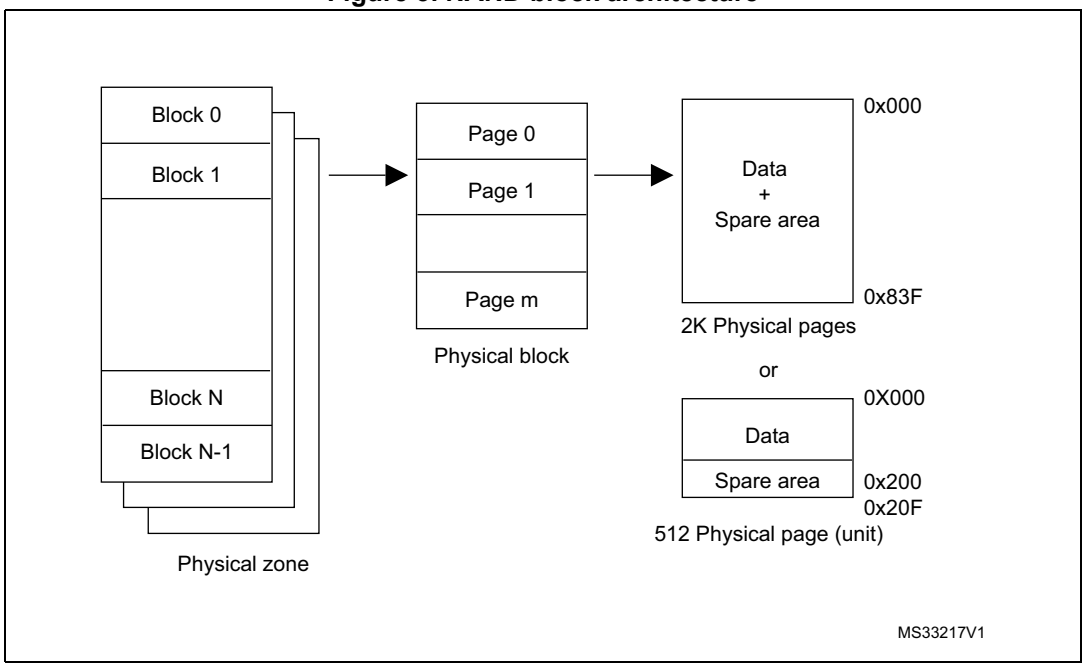

The spare area contains information about the page and the code error correction:

For small page (512 + 16 Byte) NAND Flash:

Table 1. Spare area format for small NAND Flash

Logical Index	Block Status	Data Status	Wear Leveling counter	ECC

For Large page (2048 + 64 Byte) NAND Flash:

Table 2. Spare area format for large NAND Flash

Block Status	Data Status	Logical Index	Wear Leveling counter	ECC

- The Logical Index contains the logical address of the block.
- The Block Status returns the status of the block if it is valid or not.
- The Data Status informs if the page is valid or invalid.
- Wear Leveling Counter is the number of times the block has been erased.
- The ECC is the error correction code calculated for each page.

NAND INTERFACE

- x8 or x16 bus width
- Multiplexed Address/ Data
- Pinout compatibility for all densities

SUPPLY VOLTAGE

- 1.8V device: VCC = 1.65 to 1.95V
- 3.0V device: VCC = 2.7 to 3.6V

PAGE SIZE

- x8 device: (512 + 16 spare) Bytes
- x16 device: (256 + 8 spare) Words
- x8 device: (2048 + 64 spare) Bytes
- x16 device: (1024 + 32 spare) Words

1.5 NAND pin mapping

I/O 8-15 Data Input/Outputs: for x16 devices. The I/O pins are used to input data, address, command and output data during read operation.

I/O 0-7 Data Input/Outputs: Address Inputs, or Command Inputs for x8 and x16 devices.

ALE Address Latch Enable: When active, an address can be written.

CLE Command Latch Enable: This pin should be LOW while writing commands to the command register.

CE/ Chip Enable: The CE input enables the device. Signal is active low. If the signal is inactive the device will be in standby.

RE/ Read Enable: The RE input is the serial data out control. Signal is active low to out data.

RB/ Ready/Busy (open-drain output) The RB output provides the status of the device operation. It is an open drain output, hence should be connected to a GPIO with pull-up.

- LOW: a program, erase or read operation is in process.
- HIGH: the process is complete.

WE/ Write Enable: The WE input controls write operations to I/O port. Commands, data and address are latched on the rising edge of WE.

WP/ Write Protect: Typically connected to Vcc, but may also be connected to a GPIO.

2 NAND driver firmware modules

The NAND driver library has the following modules:

1. Garbage collection
2. Wear leveling
3. Bad block management
4. ECC check
5. LUT
6. FAT file system

2.1 Garbage collection

The Garbage Collection software copies the valid data into a new (free) area and erases the original invalid data.

Garbage Collection is performed when a virtual block is full or the number of free pages in the whole device is lower than a specified threshold value.

The basic operations involved in Garbage Collection are the following:

1. The virtual blocks meeting the conditions are selected for erasure.
2. The valid physical pages are copied into a free area.
3. The selected physical blocks are erased.

As virtual blocks can contain more than one physical block, the Garbage Collection may erase more than one physical block.

2.2 Wear leveling

Wear leveling is a technique to increase the lifetime of NAND Flash memory. The number of reliable write cycles in NAND Flash is 100,000 erase/write cycles. If some of the blocks are written repeatedly, wearing of these blocks will happen earlier than other blocks. To balance the erase cycles over all the blocks, a wear leveling technique is introduced.

All new data is written to the empty blocks. The memory controller selects the new empty block based on the number of write / erase cycles it has experienced.

After the new data is written, the controller updates the LUT to point to the position of the selected physical block. The block containing the old data is erased and the number of write/erase cycles increments.

Figure 4. Flow of wear leveling mechanism for STEVAL-CCM006V1

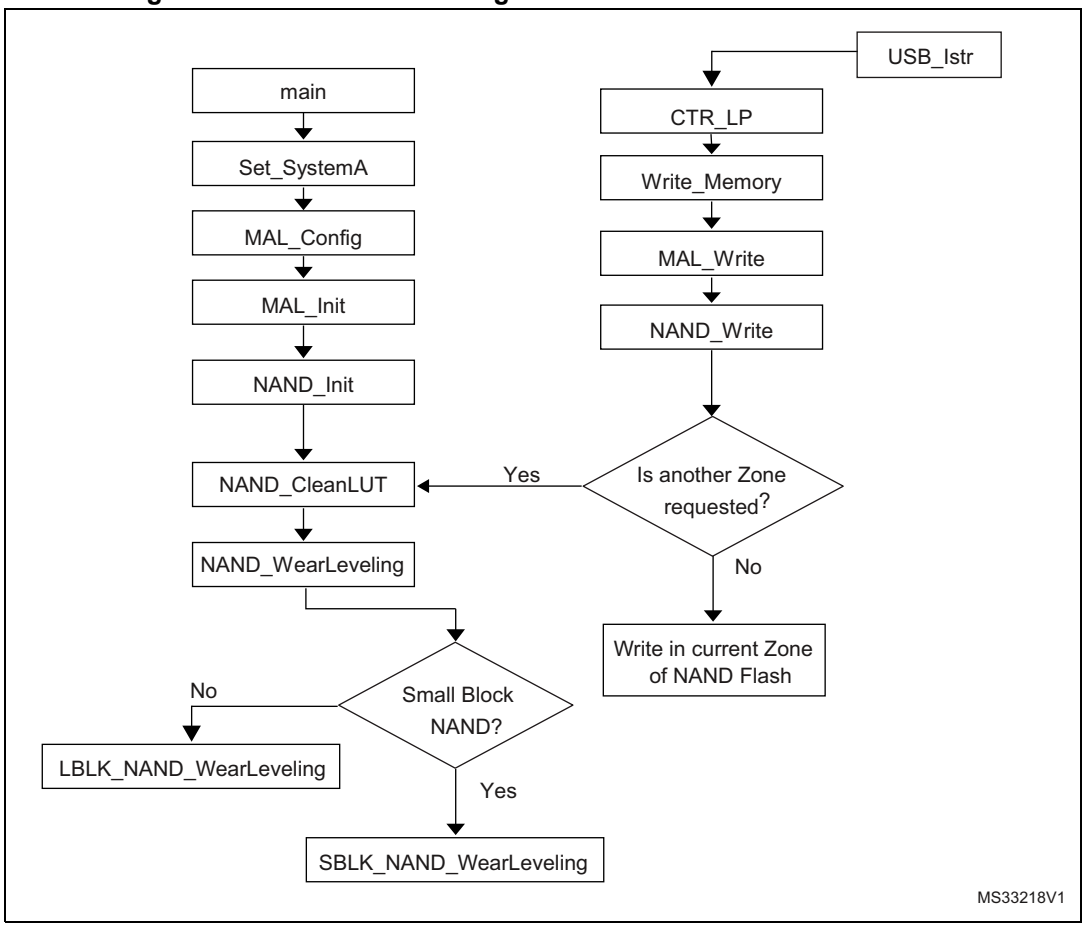

Figure 5. Flow of wear leveling mechanism for STEVAL-CCM007V1/ 008V1

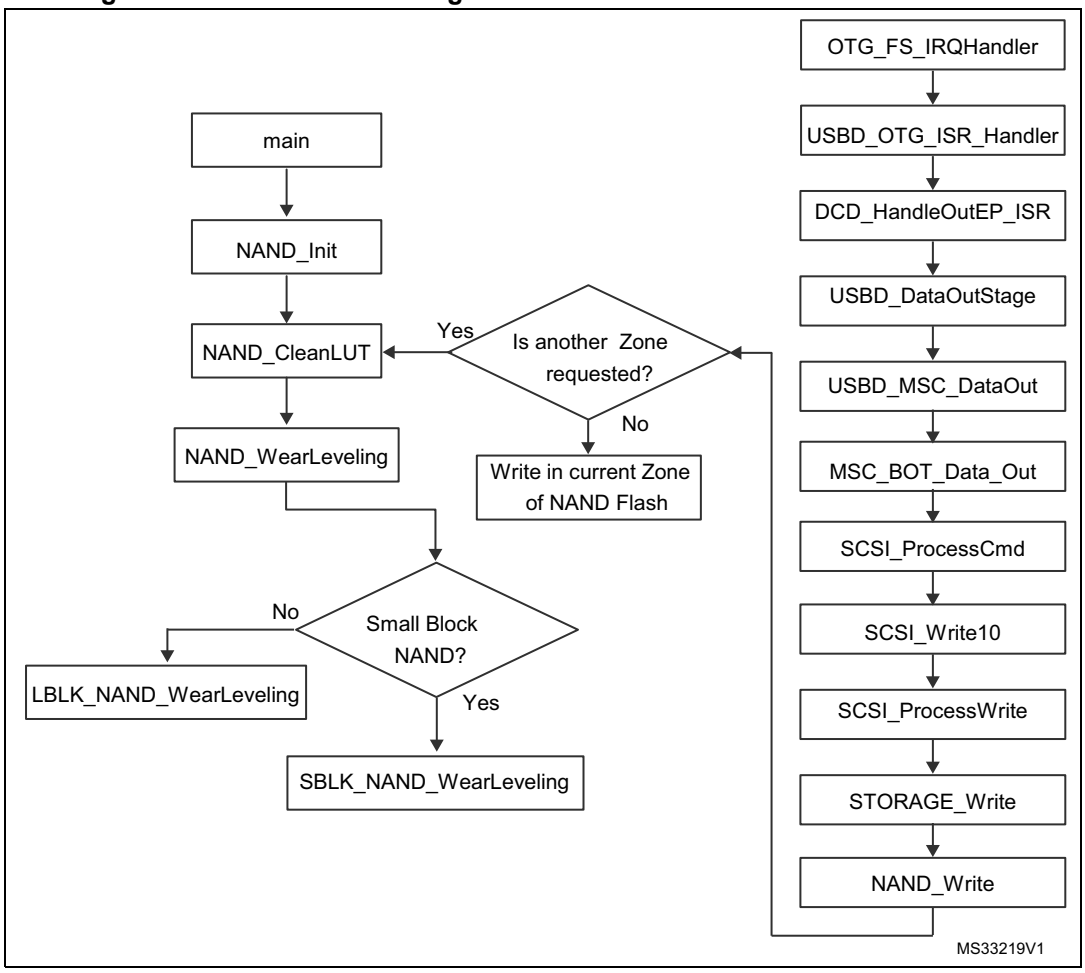

The above figure gives an overview of the firmware flow with respect to the way the Wear Leveling Mechanism is implemented.

Let us consider a scenario in which the host is trying to send the data to the controller via USB and write it to the NAND Flash. The corresponding CBW has to be decoded. The function given below is called in such a case, to write to the memory which uses the information provided from the CBW

void SCSI_Write10_Cmd(uint8_t lun, uint32_t LBA, uint32_t BlockNbr)

This function has the following arguments, the logical unit number, Logical block address (LBA) and the block number. The LBA passed from the host is sequential and maps to the address of the block in NAND Flash memory which comes out to be sequential.

A structure is used to store the address:

```
typedef struct
{
  uint16_t Zone;
  uint16_t Block;
  uint16_t Page;
} NAND_ADDRESS;
```

NAND_ADDRESS NAND_GetAddress (uint32_t Address)

The above function translates a logical address into a physical one and stores it in a structure element of type NAND_ADDRESS.

While writing to the NAND, the wear level algorithm should return the block to be written of which the erase count is least. To maintain the list of USED, FREE and BAD blocks an array is maintained: LUT[ ].

The previously fetched address for writing, and the free block obtained with least erase counts are swapped in LUT and updated, this ensures that the write takes place at the block with least erase count.

uint16_t NAND_GetFreeBlock (void)

The above function is called to get the free block for swap. The function returns the first free block it finds in the LUT[ ]. This implies that the LUT[ ] should have the free blocks arranged in the increasing order of erase count. The LUT[ ] is updated by the following function.

uint16_t NAND_BuildLUT (uint8_t ZoneNbr)

The above function arranges the bad block at the bottom of the array and the used and free blocks are located in the upper part of the array.

uint16_t NAND_WearLeveling (void)

The above function sorts the free blocks in the ascending order based on the wear level count. Now, the free block used for writing in the NAND would be the one with the least erase count.

2.3 ECC

Unlike NOR Flash memory that does not require error correction code, NAND memory needs to ensure data integrity.

The disadvantage of the NAND configuration is that when a cell is read, the sense amplifier detects a signal much lower than for the NOR configuration because many transistors are in series. Therefore access to a cell is not straightforward and must necessarily go through all the cells in series which reduces precision and makes code error correction required.

There are three error correction codes:

- The Hamming code can correct only one bit error.
- The Reed Solomon code can correct more errors.
- The BCH code can correct many errors and is more efficient than Reed Solomon.

2.3.1 Hamming code for NAND Flash

The Hamming code algorithm used by NAND Flash-based applications calculates two values of ECC for a data packet. Each bit in the values of ECC parity represents half of the bits of the data packet.

For one byte

The trick is how the data bits are partitioned for each of the parity calculations. To calculate ECC, the data bits are first divided into halves, quarters, eighths and so on until you reach the bit unit.

Figure 6. Example of decomposition of a data packet

Bit position	7	6	5	4	3	2	1	0	
		1		1		1		1	Even bits
			0	1			0	1	Even quarters
					0	1	0	1	Even halves
Data packet	0	1	0	1	0	1	0	1	
	0	1	0	1					Odd bits
	0	1			0	1			Odd quarters
	0		0		0		0		Odd halves

MS33220V1

After the partition of the data packet, the parity of each group is calculated to generate two values of ECC. The results are concatenated to form the ECC values.

ECC even = 0 ^ 1 ^ 0 ^ 1, 0 ^ 1 ^ 0 ^ 1, 1 ^ 1 ^ 1 ^ 1 = 000
ECC odd = 0 ^ 1 ^ 0 ^ 1, 0 ^ 1 ^ 0 ^ 1, 0 ^ 0 ^ 0 ^ 0 = 000

These ECC bits allow us to identify the error position when the data packet is analyzed at a later date. Data packets require larger number of ECC values. Each data packet of 2n-bit ECC requires a value of n bits.

Based on this calculation, both the data packet and the ECC values are programmed into the NAND Flash memory. Later, when the data packet is read from the NAND, the ECC values are recalculated. Data corruption is indicated when the values of the newly calculated ECC differ from those programmed into the NAND Flash.

Applying “exclusive or” to all four values of ECC (two old and two new), one can determine whether one or more bits have been corrupted. If the result is 000 there is no corruption. If the result is 111 then a single bit is wrong. If two or more bits were damaged, this code allows the detection of two errors and the correction of only one bit.

ECCeven (old) ^ ECCodd (old) ^ ECCeven (new) ^ ECCodd (new)

When the result shows that a bit has been corrupted, the address of this bit can be identified by the application of “exclusive or” on both ECC odd values

ECCodd (old) ^ ECCodd (new)

The erroneous bit position is identified by the position of the 1 in the "exclusive or" value.

For a package of several bytes

As the size of data packets increases, the Hamming algorithm becomes more efficient. Each doubling of the data packet requires two additional bits in the ECC. A data packet size of 512 bytes (the size of a page of the NAND memory used) requires 24 bits of ECC. The extension of a 1 byte packet to a 512 byte packet requires only a change to the size of data partitions, the algorithm remains the same.

2.3.2 Error detection and correction

Figure 7. Flow chart for error detection and correction

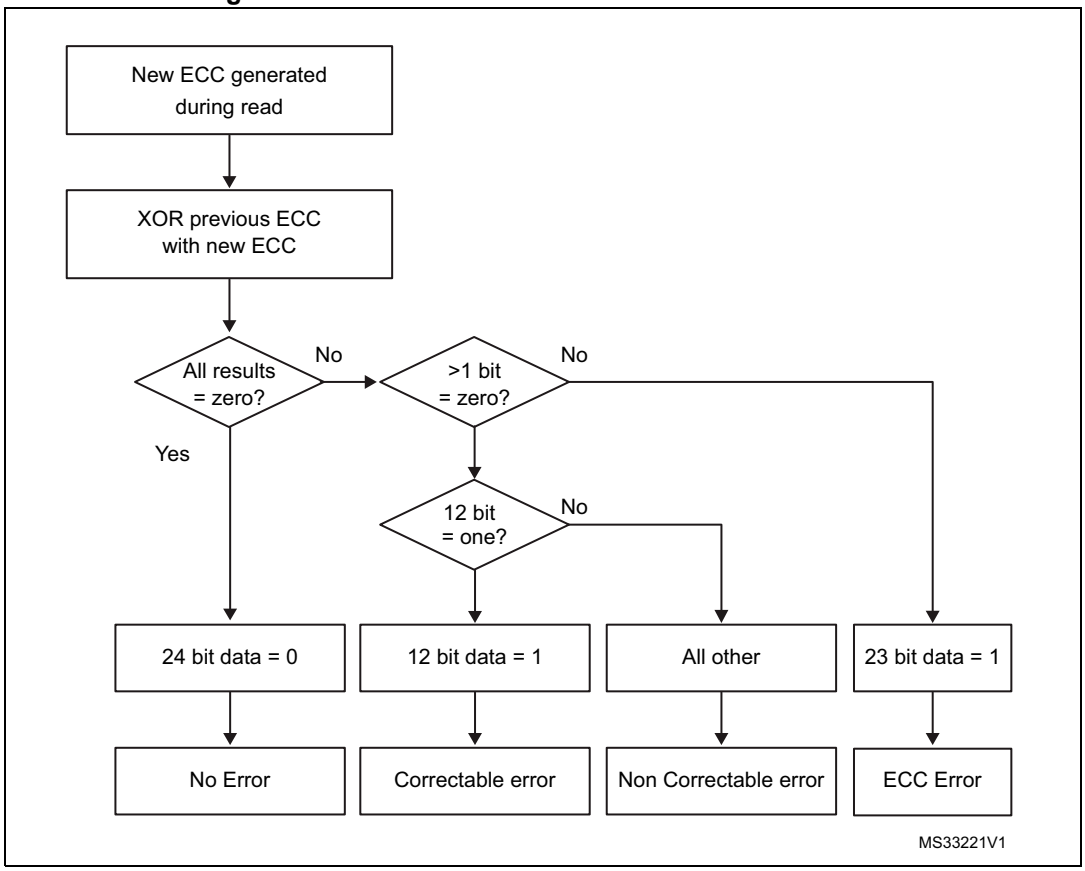

2.4 Bad block management

Bad blocks contain one or more invalid bits whose reliability is not guaranteed. They may be present when the device is shipped, or may develop during the lifetime of the device.

Figure 8. Flow chart for bad block management

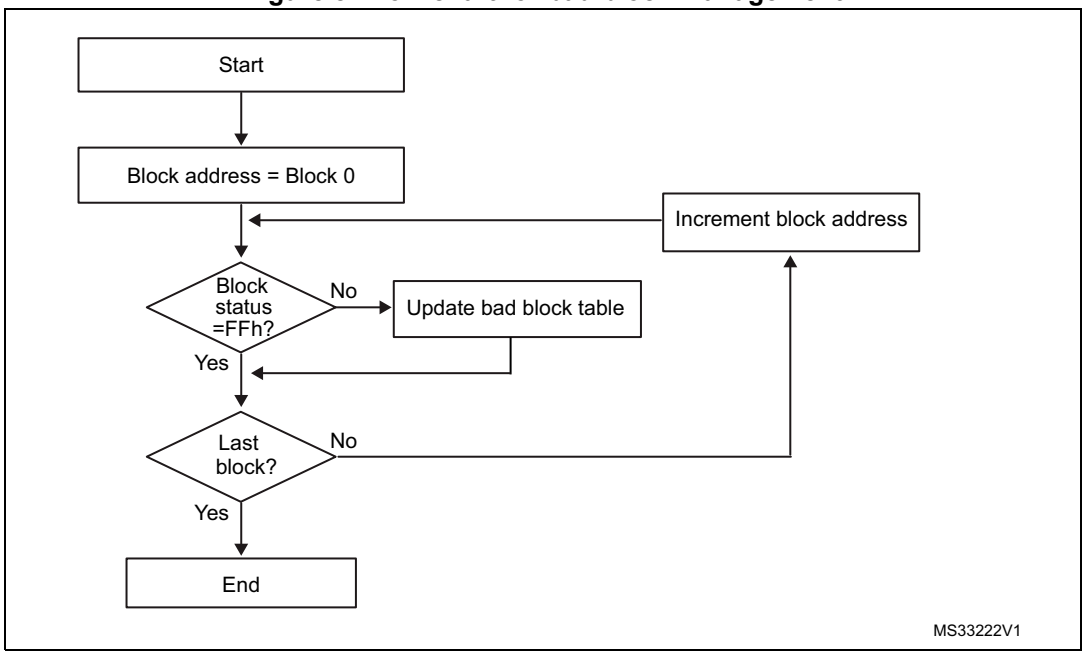

2.5 Look up table (LUT)

The LUT is used to find the Application Block Number corresponding to the Logical address (SCSI_LBA). All blocks are scanned and User data is read from the Spare area of each block of NAND Flash to build the LUT.

2.6 File system

The free file system used in the NAND library is FAT_FS_ELM from ChaN. The NAND file system interface module “ff_user_interface.c” allows interfacing of file systems with the NAND driver. In standalone mode it displays the .bmp images stored in the “pics” folder of NAND Flash. This module should be ported to the selected file system.

Table 3. File system interface functions

Function	Description
disk_initialize	Initialize disk drive.
disk_read	Interface function for a logical page read.
disk_write	Interface function for a logical page write.
disk_status	Interface function for testing if unit is ready.
disk_ioctl	Control device-dependent features.

Figure 9. Flow chart for File System

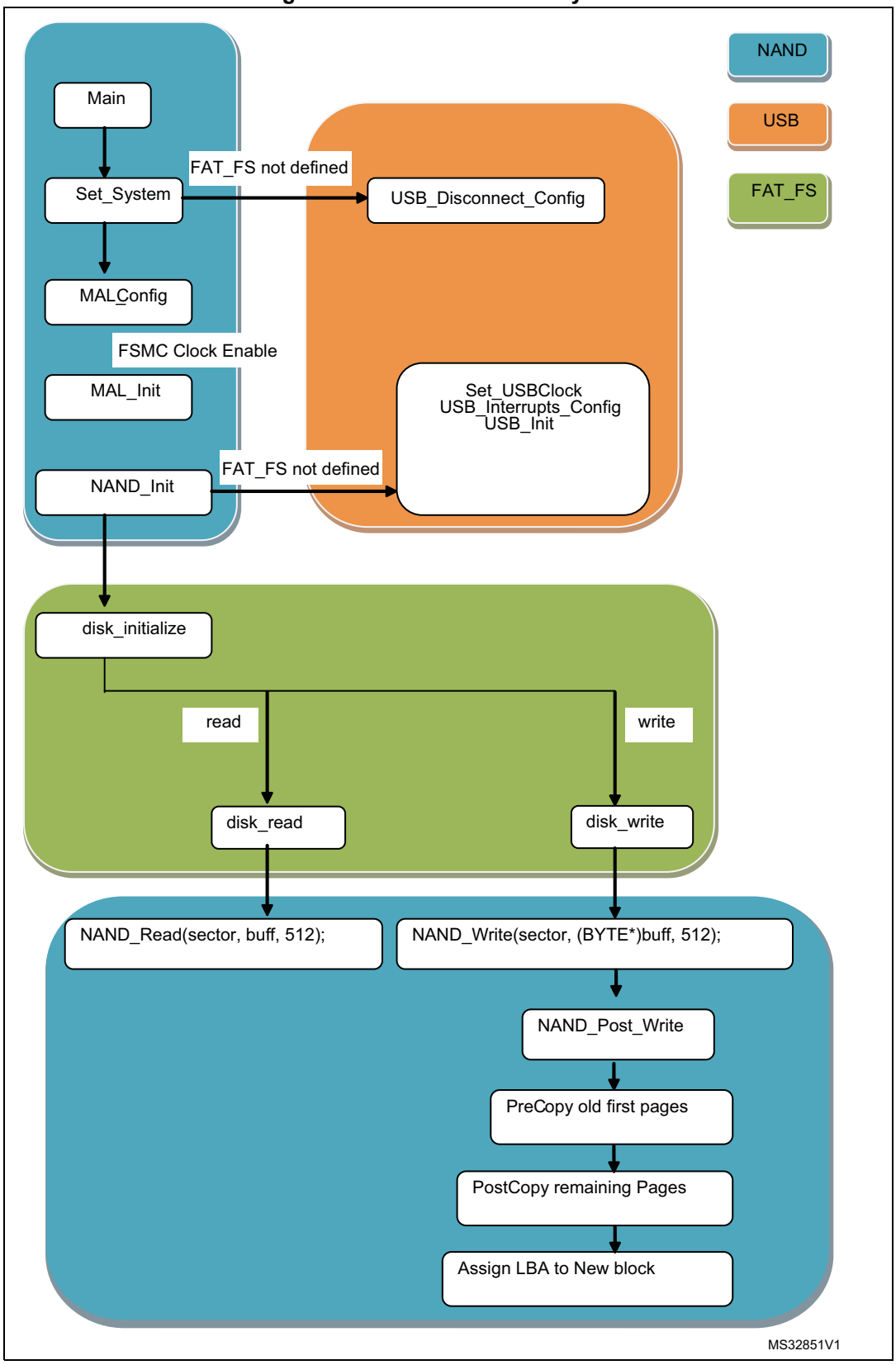

2.7 NAND driver files

2.7.1 nand_drv.c, nand_drv.h functions

Table 4. NAND_Init

Function name	NAND_Init.
Prototype	uint16_t NAND_Init(void)
Behavior description	Initializes NAND Interface
Input parameter	None
Output parameter	Status of NAND Initialization. This parameter can be: – NAND_OK: when the NAND is OK. – NAND_FAIL: when NAND fails to initialize.

Table 5. NAND_Write

Function name	NAND_Write.
Prototype	uint16_t NAND_Write(uint32_t Memory_Offset, uint8_t *Writebuff, uint16_t Transfer_Length)
Behavior description	Writes one sector at once
Input parameter	Memory_Offset: Memory Offset. Writebuff: Pointer to the data to be written. Transfer_Length: Number of byte to write.
Output parameter	Status of NAND Write. This parameter can be: – NAND_OK: when the NAND Write is successful – NAND_FAIL: when NAND fails to Write.

Table 6. NAND_Read

Function name	NAND_Read.
Prototype	uint16_t NAND_Read(uint32_t Memory_Offset, uint8_t *Readbuff, uint16_t Transfer_Length)
Behavior description	Reads sectors.
Input parameter	Memory_Offset: Memory Offset. Readbuff: Pointer to store the read data. Transfer_Length: Number of byte to read.
Output parameter	Status of NAND Read. This parameter can be: – NAND_OK: when the NAND Read is successful. – NAND_FAIL: when NAND fails to Read.

Table 7. NAND_WriteECC

Function name	NAND_WriteECC.
Prototype	uint16_t NAND_WriteECC(uint32_t Memory_Offset, uint8_t *Writebuff, uint16_t NumByte)
Behavior description	Writes one sector & copy rest Block during ECC Correctable Error Case.
Input parameter	Memory_Offset: Memory Offset. Writebuff: Pointer to the data to be written. Transfer_Length: Number of byte to write.
Output parameter	Status of NAND Write. This parameter can be: – NAND_OK: when the NAND Write is successful – NAND_FAIL: when NAND fails to Write

Table 8. NAND_PostWriteECC

Function name	NAND_PostWriteECC.
Prototype	uint16_t NAND_PostWriteECC(void)
Behavior description	Copies whole block after writing corrected page in ECC Correction.
Input parameter	None
Output parameter	Status of NAND Write.

Table 9. NAND_CleanLUT

Function name	NAND_CleanLUT.
Prototype	uint16_t NAND_CleanLUT (uint8_t ZoneNum)
Behavior description	Rebuilds the Look Up Table.
Input parameter	ZoneNbr: Zone Number to Rebuild the Look Up Table.
Output parameter	Status of NAND Build look up table. This parameter can be: – NAND_OK: when the NAND Clean is successful. – NAND_FAIL: when NAND fails to clean look up table.

Table 10. NAND_WearLeveling

Function name	NAND_WearLeveling.
Prototype	uint16_t NAND_WearLeveling (uint8_t ZoneNumber)
Behavior description	Builds the Look Up Table According to the Wear Count.
Input parameter	ZoneNumber: Zone Number.
Output parameter	Status of NAND wear Leveling. This parameter can be: – NAND_OK: when the NAND wear leveling is successful. – NAND_FAIL: when NAND fails to wear leveling.

Table 11. SBLK_NAND_WearLeveling

Function name	SBLK_NAND_WearLeveling.
Prototype	uint16_t SBLK_NAND_WearLeveling (uint8_t ZoneNumber)
Behavior description	Builds the Look Up Table According to the Wear Count.
Input parameter	ZoneNumber: Zone Number.
Output parameter	Status of SBLK_NAND_WearLeveling. This parameter can be: – NAND_OK: when the NAND wear leveling is successful – NAND_FAIL: when NAND fails to wear leveling.

Table 12. LBLK_NAND_WearLeveling

Function name	LBLK_NAND_WearLeveling.
Prototype	uint16_t LBLK_NAND_WearLeveling (uint8_t ZoneNumber)
Behavior description	Builds the Look Up Table According to the Wear Count.
Input parameter	ZoneNumber: Zone Number.
Output parameter	Status of LBLK_NAND_WearLeveling. This parameter can be: – NAND_OK: when the NAND wear leveling is successful – NAND_FAIL: when NAND fails to wear leveling.

Table 13. NAND_GetFreeBlock

Function name	NAND_GetFreeBlock.
Prototype	uint16_t NAND_GetFreeBlock (void)
Behavior description	Looks for a free Block for data exchange from Look Up Table.
Input parameter	None
Output parameter	Logical Block Number of free Block.

Table 14. SBLK_NAND_ReadSpareArea

Function name	SBLK_NAND_ReadSpareArea.
Prototype	SPARE_AREA SBLK_NAND_ReadSpareArea (uint32_t address)
Behavior description	Page Number in multiple of 512 Byte per Page.
Input parameter	address: Corresponding Page Number of Spare Area to be read.
Output parameter	SPARE AREA after reading.

Table 15. LBLK_NAND_ReadSpareArea

Function name	LBLK_NAND_ReadSpareArea.
Prototype	LBLK_SPARE_AREA LBLK_NAND_ReadSpareArea (uint32_t address)
Behavior description	Page Number in multiple of 512 Byte per Page.
Input parameter	address: Corresponding Page Number of Spare Area to be read.
Output parameter	LBLK_SPARE_AREA after reading.

Table 16. WriteSpareArea

Function name	WriteSpareArea.
Prototype	uint16_t WriteSpareArea (uint32_t address, uint8_t *buff)
Behavior description	Page Number in multiple of 512 Byte.
Input parameter	address: Corresponding Page Number of Spare Area to be read. buff: Pointer to the data to be written in SPARE AREA.
Output parameter	Status of WriteSpareArea. This parameter can be: – NAND_OK: when Write SPARE AREA is successful. – NAND_FAIL: when Write SPARE AREA fails to Write.

Table 17. NAND_Copy

Function name	NAND_Copy.
Prototype	uint16_t NAND_Copy (NAND_ADDRESS Address_Src, NAND_ADDRESS Address_Dest, uint16_t PageToCopy)
Behavior description	Copies pages from source to destination.
Input parameter	Address_Src: Source Address. Address_Dest: Destination Address. PageToCopy: Number of Page to copy.
Output parameter	Status of NAND Copy. This parameter can be: – NAND_OK: when the NAND copy is successful – NAND_FAIL: when NAND fails to copy.

Table 18. NAND_CopyBack

Function name	NAND_CopyBack.
Prototype	uint16_t NAND_CopyBack (NAND_ADDRESS Address_Src, NAND_ADDRESS Address_Dest, uint16_t PageToCopy)
Behavior description	Copies pages from Source to Destination. (Source & Destination address must have same page number).
Input parameter	Address_Src: Source Address. Address_Dest: Destination Address. PageToCopy: Number of Page to copy
Output parameter	Status of NAND Copy. This parameter can be: – NAND_OK: when the NAND copy is successful – NAND_FAIL: when NAND fails to copy.

Table 19. NAND_Format

Function name	NAND_Format.
Prototype	uint16_t NAND_Format (void)
Behavior description	Format the entire NAND Flash.
Input parameter	None
Output parameter	Status of NAND Format. This parameter can be: – NAND_OK: when the NAND Format is successful – NAND_FAIL: when NAND fails to Format.

Table 20. NAND_PostWrite

Function name	NAND_PostWrite.
Prototype	uint16_t NAND_PostWrite (void)
Behavior description	NAND Post Write.
Input parameter	None
Output parameter	Status of NAND Post Write. This parameter can be: – NAND_OK: when the NAND Post Write is successful – NAND_FAIL: when NAND fails to Post Write.

Table 21. SBLK_NAND_PostWrite

Function name	SBLK_NAND_PostWrite.
Prototype	void SBLK_NAND_PostWrite (void)
Behavior description	Small Block NAND_PostWrite.
Input parameter	None
Output parameter	None

Table 22. LBLK_NAND_PostWrite

Function name	LBLK_NAND_PostWrite.
Prototype	void LBLK_NAND_PostWrite (void)
Behavior description	Large Block NAND Post Write.
Input parameter	None
Output parameter	None

Table 23. NAND_GarbageCollection

Function name	NAND_GarbageCollection.
Prototype	uint16_t NAND_GarbageCollection(void)
Behavior description	Erases Blocks every time the write operation is stopped.
Input parameter	None
Output parameter	Status of NAND Garbage collection. This parameter can be: – NAND_OK: when the NAND Garbage collection is successful – NAND_FAIL: when NAND fails to Garbage collection.

Table 24. NAND_UpdateWearLevelCounter

Function name	NAND_UpdateWearLevelCounter.
Prototype	uint16_t NAND_UpdateWearLevelCounter (NAND_ADDRESS Address)
Behavior description	Increments the value of Wear Level counter after every erase.
Input parameter	Address: Logical Address.
Output parameter	Status of NAND Update Wear Level. This parameter can be: – NAND_OK: when the NAND Update Wear Level is successful – NAND_FAIL: when NAND fails to Update Wear Level.

Table 25. NAND_ConvertPhyAddress

Function name	NAND_ConvertPhyAddress.
Prototype	NAND_ADDRESS NAND_ConvertPhyAddress (uint32_t Address)
Behavior description	Converts Memory Offset into Physical Address.
Input parameter	Address: Memory Offset in Multiple of 512B(0,512/512,1024/512...).
Output parameter	Physical Address.

Table 26. NAND_BuildLUT

Function name	NAND_BuildLUT.
Prototype	uint16_t NAND_BuildLUT (uint8_t Zone)
Behavior description	Builds the Look Up Table.
Input parameter	ZoneNbr: The Zone Number.
Output parameter	Status of NAND Build Look Up Table. This parameter can be: – NAND_OK: when the NAND Build Look Up Table is successful – NAND_FAIL: when NAND fails to Build Look Up Table.

Table 27. SBLK_NAND_BuildLUT

Function name	SBLK_NAND_BuildLUT.
Prototype	uint16_t SBLK_NAND_BuildLUT (uint8_t ZoneNumber)
Behavior description	Builds the Look Up Table.
Input parameter	ZoneNbr: The Zone Number.
Output parameter	Status of NAND Build Look Up Table. This parameter can be: – NAND_OK: when the NAND Build Look Up Table is successful – NAND_FAIL: when NAND fails to Build Look Up Table.

Table 28. LBLK_NAND_BuildLUT

Function name	LBLK_NAND_BuildLUT.
Prototype	uint16_t LBLK_NAND_BuildLUT (uint8_t ZoneNbr)
Behavior description	Builds the Look Up Table.
Input parameter	ZoneNbr: The Zone Number.
Output parameter	Status of NAND Build Look Up Table. This parameter can be: – NAND_OK: when the NAND Build Look Up Table is successful – NAND_FAIL: when NAND fails to Build Look Up Table.

Table 29. GetParity

Function name	GetParity.
Prototype	uint8_t GetParity (uint16_t in_value)
Behavior description	Calculate parity.
Input parameter	in_value: 16-bit value.
Output parameter	Status.

Table 30. Swap

Function name	Swap.
Prototype	uint16_t Swap (uint16_t in)
Behavior description	Swaps a 16-bit.
Input parameter	in: 16-bit value.
Output parameter	swapped value.

Table 31. WritePage

Function name	WritePage.
Prototype	void NAND_WritePage(NAND_ADDRESS Address, uint8_t *buff, uint16_t len)
Behavior description	Writes a page & Corresponding SPARE AREA.
Input parameter	Address: The address of the page to write. *buff: The buffer to write in. len: The Number of page to write.
Output parameter	None

Table 32. SBLK_NAND_WritePage

Function name	SBLK_NAND_WritePage.
Prototype	void SBLK_NAND_WritePage(NAND_ADDRESS Address, uint8_t *buff, uint16_t len)
Behavior description	Writes page & Corresponding ECC in SPARE AREA in Small Block NAND.
Input parameter	Address: The address of the page to write. *buff: The buffer to write in. len: The Number of page to write.
Output parameter	None

Table 33. LBLK_NAND_WritePage

Function name	LBLK_NAND_WritePage.
Prototype	void LBLK_NAND_WritePage(NAND_ADDRESS Address, uint8_t *buff, uint16_t len)
Behavior description	Write a page & Corresponding ECC in SPARE AREA in Small Block NAND.
Input parameter	Address: The address of the page to write. *buff: The buffer to write in. len: The Number of page to write.
Output parameter	None

Table 34. ReadPage

Function name	ReadPage.
Prototype	void NAND_ReadPage (NAND_ADDRESS Address, uint8_t *buff, uint16_t len)
Behavior description	Reads a page considering Error correction code(1 bit per 512 Byte).
Input parameter	Address: The address of the page to read. *buff: The buffer to read from. len: The number of page to read.
Output parameter	None

Table 35. SBLK_NAND_ReadPage

Function name	SBLK_NAND_ReadPage.
Prototype	void SBLK_NAND_ReadPage (NAND_ADDRESS Address, uint8_t *buff, uint16_t len)
Behavior description	Reads a page considering Error correction code (1 bit per 512 Byte) in Small Block NAND.
Input parameter	Address: The address of the page to read. *buff: The buffer to read from. len: The number of page to read.
Output parameter	None

Table 36. LBLK_NAND_ReadPage

Function name	LBLK_NAND_ReadPage.
Prototype	void LBLK_NAND_ReadPage (NAND_ADDRESS Address, uint8_t *buff, uint16_t len)
Behavior description	Reads a page considering Error correction code (1 bit per 512 Byte) in Large Block NAND.
Input parameter	Address: The address of the page to read. *buff: The buffer to read from. len: The number of page to read.
Output parameter	None

Table 37. BitCount

Function name	BitCount.
Prototype	uint8_t BitCount(uint32_t num)
Behavior description	Counts the number of 1's in 32 bit Number.
Input parameter	num: The number in which number of 1's to be counted.
Output parameter	The number of one in 32 bit number.

2.7.2 fsmc_nand_if.c, fsmc_nand_if.h functions

Table 38. FSMC_SelectNANDType

Function name	FSMC_SelectNANDType.
Prototype	void FSMC_SelectNANDType(void)
Behavior description	Selects the NAND Type & sets the Required Parameter accordingly. NAND may be SBLK_NAND or LBLK_NAND.
Input parameter	None
Output parameter	None

Table 39. FSMC_NAND_NON_ONFI_Compliance

Function name	FSMC_NAND_NON_ONFI_Compliance.
Prototype	void FSMC_NAND_NON_ONFI_Compliance(void)
Behavior description	Selects the NON ONFI NAND Type & sets the Required Parameter accordingly. NAND may be SBLK_NAND or LBLK_NAND.
Input parameter	None
Output parameter	None

Table 40. FSMC_NAND_Init

Function name	FSMC_NAND_Init.
Prototype	void FSMC_NAND_Init(void)
Behavior description	Configures the FSMC and GPIOs to interface with the NAND memory. This function must be called before any write/read operation.
Input parameter	None
Output parameter	None

Table 41. FSMC_NAND_ReadID

Function name	FSMC_NAND_ReadID
Prototype	void FSMC_NAND_ReadID(NAND_IDTypeDef* NAND_ID)
Behavior description	Reads NAND memory's Manufacturer and Device ID.
Input parameter	NAND_ID: pointer to a NAND_IDTypeDef structure
Output parameter	None

Table 42. FSMC_NAND_WriteSmallPage

Function name	FSMC_NAND_WriteSmallPage.
Prototype	uint32_t FSMC_NAND_WriteSmallPage(uint8_t *pBuffer, NAND_ADDRESS Address, uint32_t NumPageToWrite)
Behavior description	Writes one or several 512 Bytes Page size.
Input parameter	pBuffer: pointer on the Buffer containing data to be written. Address: First page address. NumPageToWrite: Number of page to write.
Output parameter	New status of the NAND operation. This parameter can be: – NAND_TIMEOUT_ERROR: when the previous operation generate a Timeout error. – NAND_READY: when memory is ready for the next operation New status of the increment address operation. It can be: – NAND_VALID_ADDRESS: When the new address is valid. – NAND_INVALID_ADDRESS: When the new address is invalid.

Table 43. FSMC_NAND_ReadSmallPage

Function name	FSMC_NAND_ReadSmallPage.
Prototype	uint32_t FSMC_NAND_ReadSmallPage(uint8_t *pBuffer, NAND_ADDRESS Address, uint32_t NumPageToRead)
Behavior description	Sequential read from one or several 512 Bytes Page size.
Input parameter	pBuffer: pointer on the Buffer to fill. Address: First page address. NumPageToRead: Number of page to read.
Output parameter	New status of the NAND operation. This parameter can be: – NAND_TIMEOUT_ERROR: when the previous operation generate a Timeout error. – NAND_READY: when memory is ready for the next operation. New status of the increment address operation. It can be: – NAND_VALID_ADDRESS: When the new address is valid. – NAND_INVALID_ADDRESS: When the new address is invalid.

Table 44. FSMC_NAND_WriteSpareArea

Function name	FSMC_NAND_WriteSpareArea.
Prototype	uint32_t FSMC_NAND_WriteSpareArea(uint8_t *pBuffer, NAND_ADDRESS Address, uint32_t NumSpareAreaTowrite)
Behavior description	Writes spare area information for specified page addresses.
Input parameter	pBuffer: pointer on the Buffer containing data to be written. Address: First page address. NumSpareAreaTowrite: Number of Spare Area to write.
Output parameter	New status of the NAND operation. This parameter can be: – NAND_TIMEOUT_ERROR: when the previous operation generate a Timeout error. – NAND_READY: when memory is ready for the next operation New status of the increment address operation. It can be: – NAND_VALID_ADDRESS: When the new address is valid. – NAND_INVALID_ADDRESS: When the new address is invalid.

Table 45. FSMC_NAND_ReadSpareArea

Function name	FSMC_NAND_ReadSpareArea.
Prototype	uint32_t FSMC_NAND_ReadSpareArea(uint8_t *pBuffer, NAND_ADDRESS Address, uint32_t NumSpareAreaToRead)
Behavior description	Reads the spare area information from the specified page addresses.
Input parameter	pBuffer: pointer on the Buffer to fill. Address: First page address. NumSpareAreaToRead: Number of Spare Area to read.
Output parameter	New status of the NAND operation. This parameter can be: – NAND_TIMEOUT_ERROR: when the previous operation generated a Timeout error. – NAND_READY: when memory is ready for the next operation New status of the increment address operation. It can be: – NAND_VALID_ADDRESS: When the new address is valid. – NAND_INVALID_ADDRESS: When the new address is invalid.

Table 46. FSMC_NAND_EraseBlock

Function name	FSMC_NAND_EraseBlock.
Prototype	uint32_t FSMC_NAND_EraseBlock(NAND_ADDRESS Address)
Behavior description	Erases complete block from NAND FLASH.
Input parameter	Address: Any address into block to be erased.
Output parameter	New status of the NAND operation. This parameter can be: – NAND_TIMEOUT_ERROR: when the previous operation generate a Timeout error. – NAND_READY: when memory is ready for the next operation.

Table 47. FSMC_NAND_Reset

Function name	FSMC_NAND_Reset.
Prototype	uint32_t FSMC_NAND_Reset(void)
Behavior description	Resets the NAND FLASH.
Input parameter	None
Output parameter	NAND_READY.

Table 48. FSMC_NAND_GetStatus

Function name	FSMC_NAND_GetStatus.
Prototype	uint32_t FSMC_NAND_GetStatus(void)
Behavior description	Gets the NAND operation status.
Input parameter	None
Output parameter	New status of the NAND operation. This parameter can be: – NAND_TIMEOUT_ERROR: when the previous operation generate a Timeout error. – NAND_READY: when memory is ready for the next operation.

Table 49. FSMC_SBLK_NAND_CopyBack

Function name	FSMC_SBLK_NAND_CopyBack.
Prototype	uint32_t FSMC_SBLK_NAND_CopyBack(NAND_ADDRESS src, NAND_ADDRESS dest)
Behavior description	Copies One Page from Source Address to Destination Address without utilizing external Memory.
Input parameter	src: Source Address. dest: Destination Address.
Output parameter	The status of the NAND memory. This parameter can be: – NAND_BUSY: when memory is busy. – NAND_READY: when memory is ready for the next operation. – NAND_ERROR: when the previous operation generates error.

Table 50. FSMC_LBLK_NAND_CopyBack

Function name	FSMC_LBLK_NAND_CopyBack.
Prototype	uint32_t FSMC_LBLK_NAND_CopyBack(NAND_ADDRESS src, NAND_ADDRESS dest)
Behavior description	Copies One Page from Source Address to Destination Address without utilizing external Memory.
Input parameter	src: Source Address. dest: Destination Address.
Output parameter	The status of the NAND memory. This parameter can be: – NAND_BUSY: when memory is busy. – NAND_READY: when memory is ready for the next operation. – NAND_ERROR: when the previous operation generates error.

Table 51. FSMC_NAND_ReadStatus

Function name	FSMC_NAND_ReadStatus.
Prototype	uint32_t FSMC_NAND_ReadStatus(void)
Behavior description	Reads the NAND memory status using the Read status command.
Input parameter	None
Output parameter	The status of the NAND memory. This parameter can be: – NAND_BUSY: when memory is busy. – NAND_READY: when memory is ready for the next operation. – NAND_ERROR: when the previous operation generates Error.

Table 52. FSMC_NAND_AddressIncrement

Function name	FSMC_NAND_AddressIncrement.
Prototype	uint32_t FSMC_NAND_AddressIncrement(NAND_ADDRESS* Address)
Behavior description	Increments the NAND memory address.
Input parameter	Address: address to increment.
Output parameter	The new status of the increment address operation. It can be: – NAND_VALID_ADDRESS: When the new address is valid address. – NAND_INVALID_ADDRESS: When the new address is invalid address.

Table 53. FSMC_NAND_ONFI_Compliance

Function name	FSMC_NAND_ONFI_Compliance.
Prototype	void FSMC_NAND_ONFI_Compliance(void)
Behavior description	Selects the ONFI NAND Type & sets the Required Parameter accordingly. NAND may be SBLK_NAND or LBLK_NAND.
Input parameter	None
Output parameter	None

Table 54. FSMC_SBLK_NAND_SendAddress

Function name	FSMC_SBLK_NAND_SendAddress.
Prototype	void FSMC_SBLK_NAND_SendAddress(NAND_ADDRESS Addr)
Behavior description	Sends the address for Small Block NAND.
Input parameter	Addr: NAND_ADRESS to be sent.
Output parameter	None.

Table 55. FSMC_LBLK_NAND_SendAddress

Function name	FSMC_LBLK_NAND_SendAddress.
Prototype	void FSMC_LBLK_NAND_SendAddress(uint32_t row, uint32_t column)
Behavior description	Sends the row & column address for Large Block NAND.
Input parameter	row: Row Address. column: Column address.
Output parameter	None.

2.8 Supported NAND Flash

Below is the list of supported NAND Flash in our firmware.

Table 56. Supported NAND Flash

	Supported NAND	Capacity	Tested
Small block NAND			
1	NAND128R3A	128 Mbits	Y
2	NAND128W3A	128 Mbits	Y
3	NAND256R3A	256 Mbits	Y
4	NAND256W3A	256 Mbits	Y
5	NAND512R3A	512 Mbits	Y
6	NAND512W3A	512 Mbits	Y
7	NAND01GR3A	1 Gbits	Y
8	NAND01GW3A	1 Gbits	Y
9	K9F5608U0A	256 MBits	Y
Large block NAND			
1	NAND512R3B	512 Mbits	N
2	NAND512W3B	512 Mbits	N
3	NAND01GR3B	1 Gbits	Y
4	NAND01GW3B	1 Gbits	Y
5	NAND02GR3B	2 Gbits	N
6	NAND02GW3B	2 Gbits	N
7	NAND04GR3B	4 Gbits	N
8	NAND04GW3B	4 Gbits	N
9	NAND08GR3B	8 Gbits	N
10	NAND08GW3B	8 Gbits	N
11	H27U4G8F2DTR	1 Gbits	Y
12	TC58NVG0S3BFT00	4 Gbits	Y

The firmware supports other manufacturer's NAND Flash with same device ID without any change to hardware or firmware.

The code size for the NAND Flash Driver files (nand_drv.c & fsmc_nand_if.c) is

Table 57. NAND Flash driver file code size

Code Size	Flash	RAM
With Optimization (High size)	6.5 KB	5 KB
Without Optimization	11.7 KB	5 KB

3 NAND evaluation board

3.1 Working with evaluation boards

The evaluation boards STEVAL-CCM006V1, STEVAL-CCM007V1 and STEVAL-CCM008V1 work in USB Mass Storage mode. In this mode NAND Flash behaves as mass storage media.

The evaluation boards STEVAL-CCM006V2, STEVAL-CCM007V2 and STEVAL-CCM008V2 work in Standalone mode. In this mode, the bmp images stored in the pics folder of root directory are displayed using the File System on the mounted TFT.

Figure 10 & *Figure 11* show the component layout to help the user locate the various components and sections on the board.

Figure 10. Evaluation board: top side

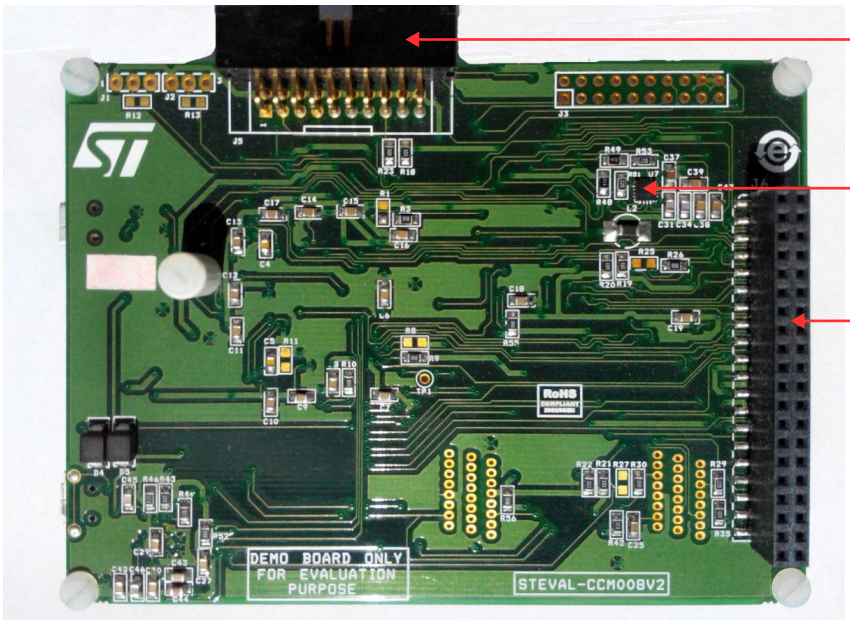

Figure 11. Evaluation board: bottom side

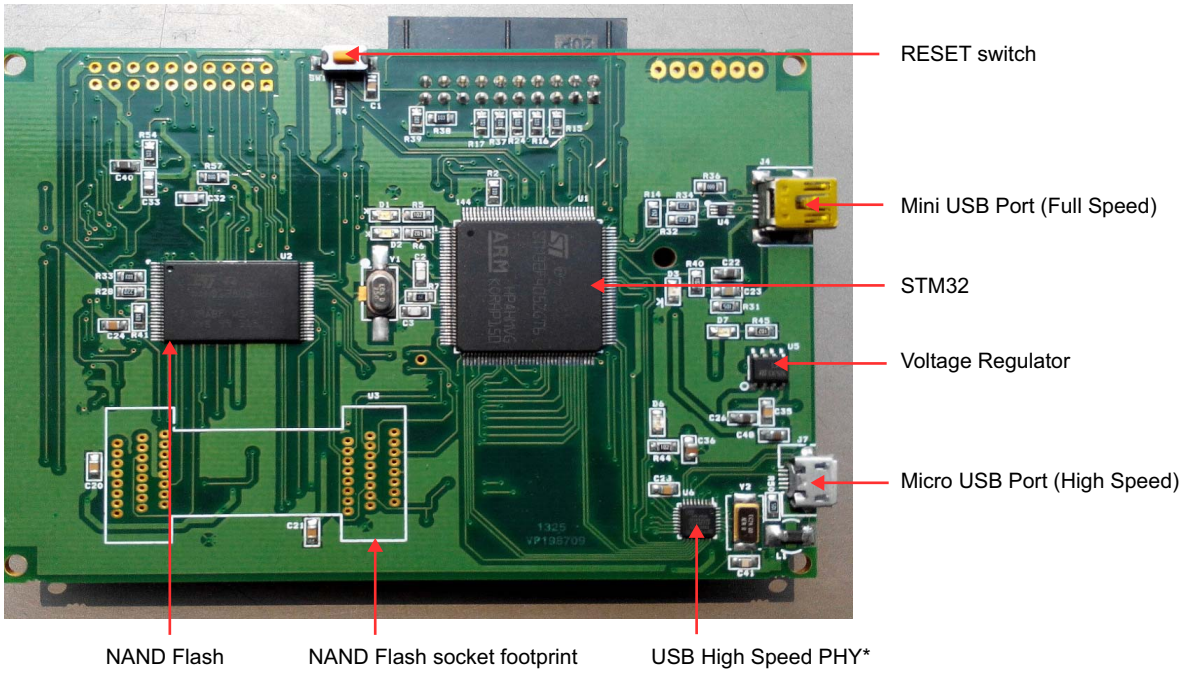

Note: The USB High Speed section is only present in STEVAL-CCM007V1, STEVAL-CCM007V2, STEVAL-CCM008V1 and STEVAL-CCM008V2.

3.1.1 Running in USB Mass Storage mode (STEVAL-CCM006/7/8V1)

The STEVAL-CCM006V1, STEVAL-CCM007V1, STEVAL-CCM008V1 boards are programmed for USB Full Speed by default. To run USB High Speed, you must program the board using proper firmware using available tool chain.

1. Connect the mini-USB cable between a jumper on the PCB and the Host (PC)
   - J4 for USB FS Demo.
   - J7 for USB HS Demo.
2. The device is detected as a USB mass storage device in Device Manager of Host (PC).

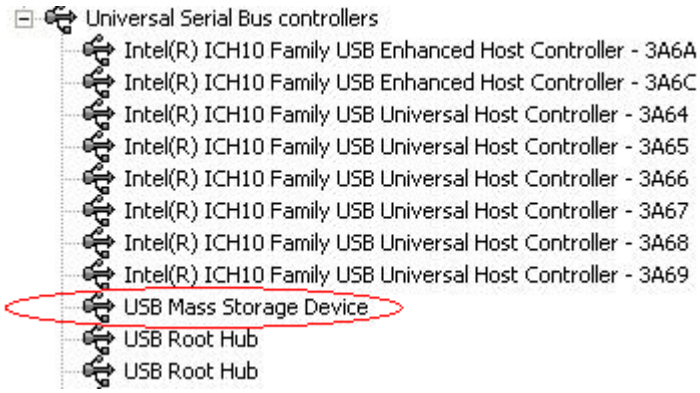

3. The device appears as a Removable Drive on the Host (PC).

4. This drive can be used as Mass Storage Media.

3.1.2 Running in Standalone mode (STEVAL-CCM006/7/8V2)

The STEVAL-CCM006V2, STEVAL-CCM007V2, STEVAL-CCM008V2 boards run in Standalone mode.

1. By default TFT is mounted on J6.
2. Connect mini-USB cable between J4 on the PCB and the Host (PC).
3. The bmp images stored in the "pics" folder of root directory are displayed on the TFT.

Figure 12. Demo running in Standalone mode

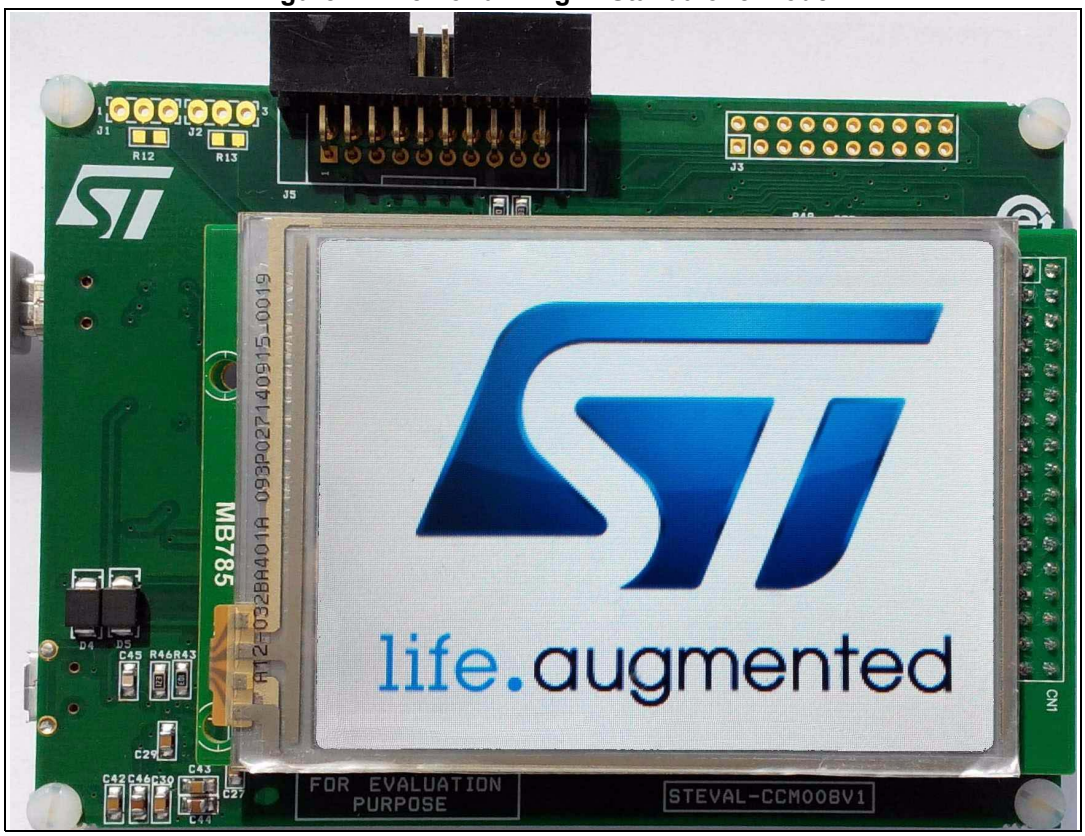

3.2 Schematics

Figure 13. Microcontroller schematic

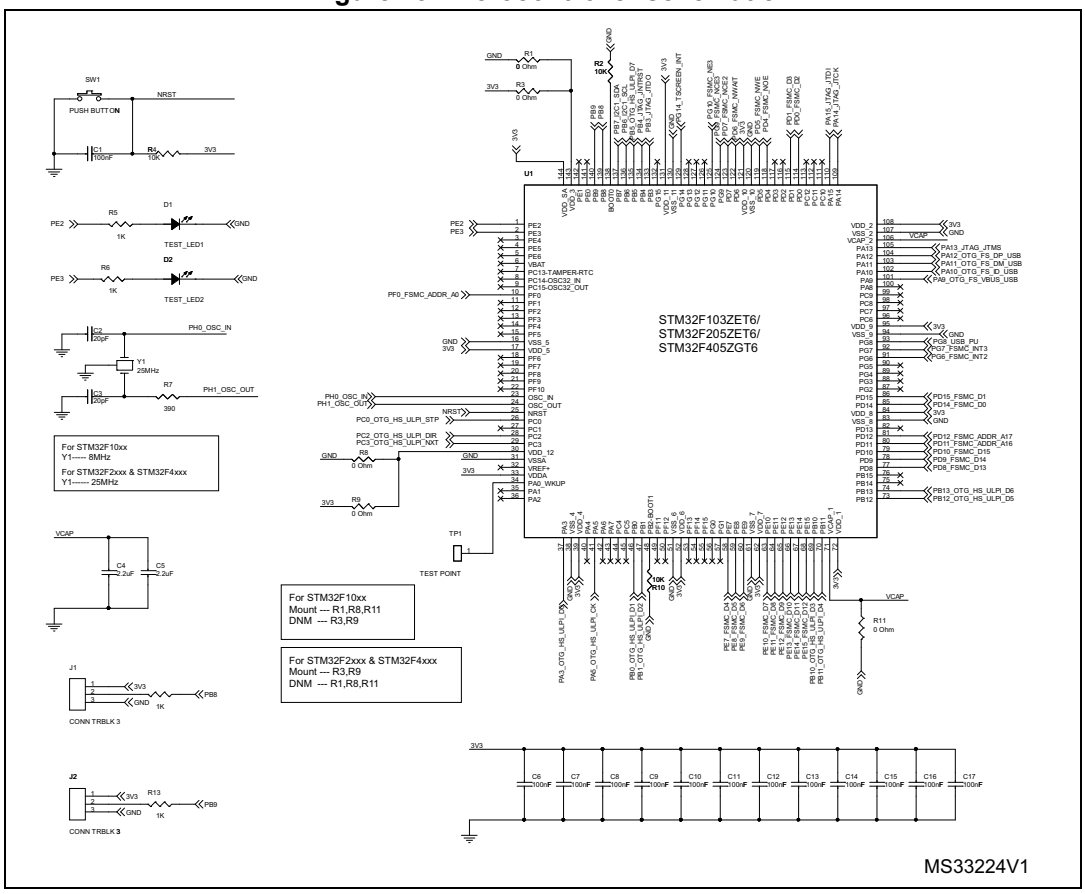

Figure 14. USB Full Speed schematic

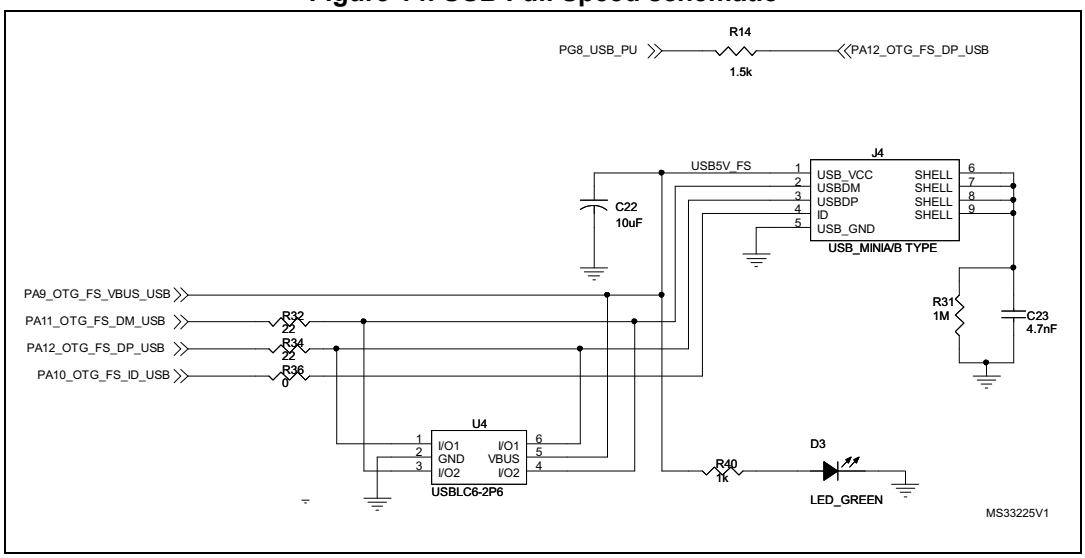

Figure 15. USB High Speed schematic

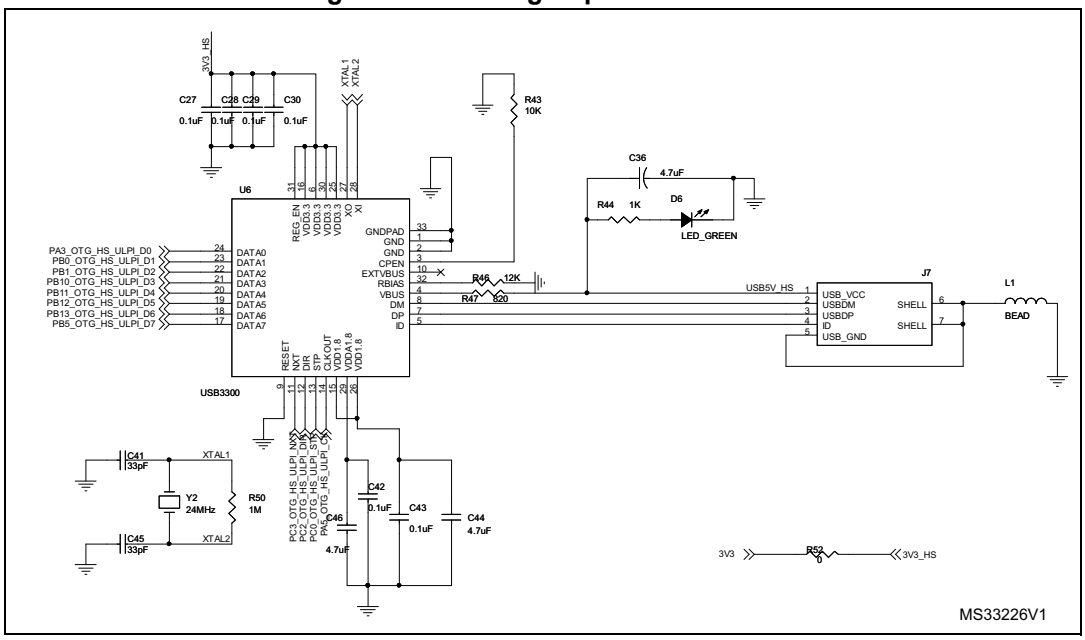

Figure 16. Touch Screen schematic

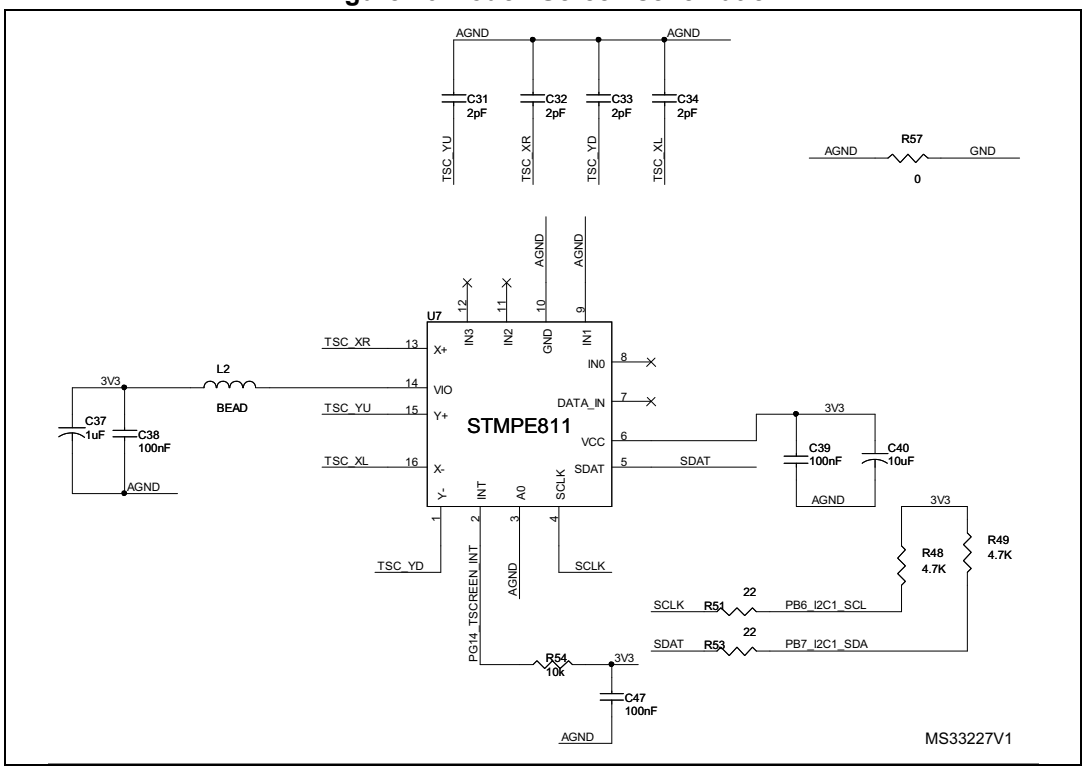

Figure 17. TFT Connector schematic

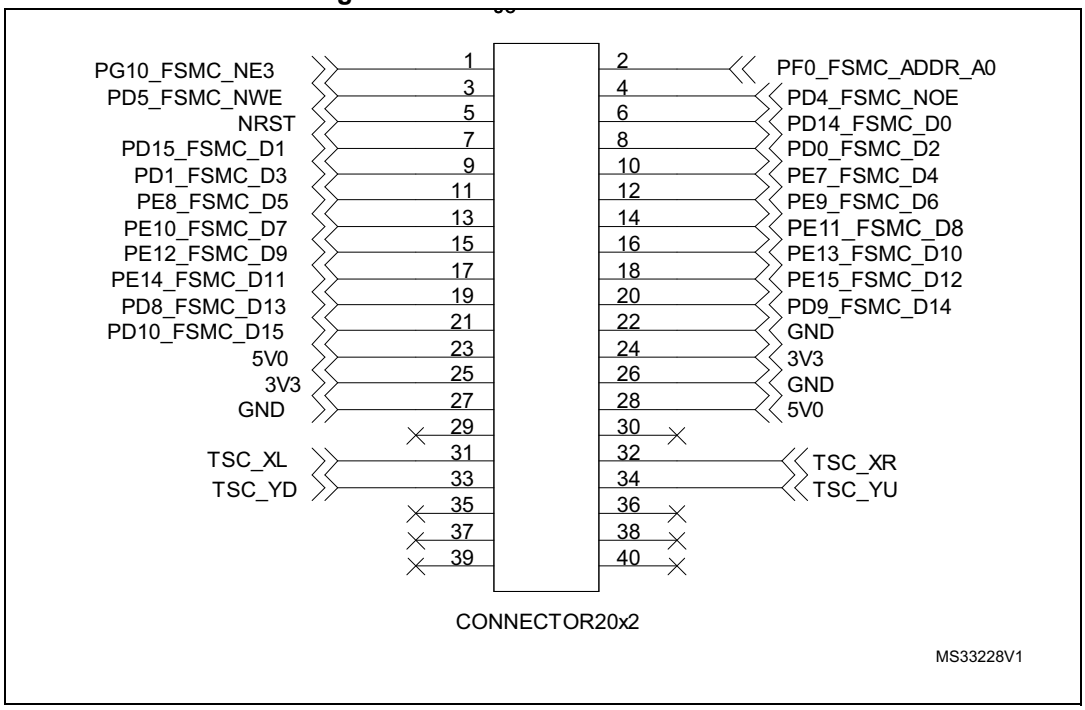

Figure 18. Power schematic

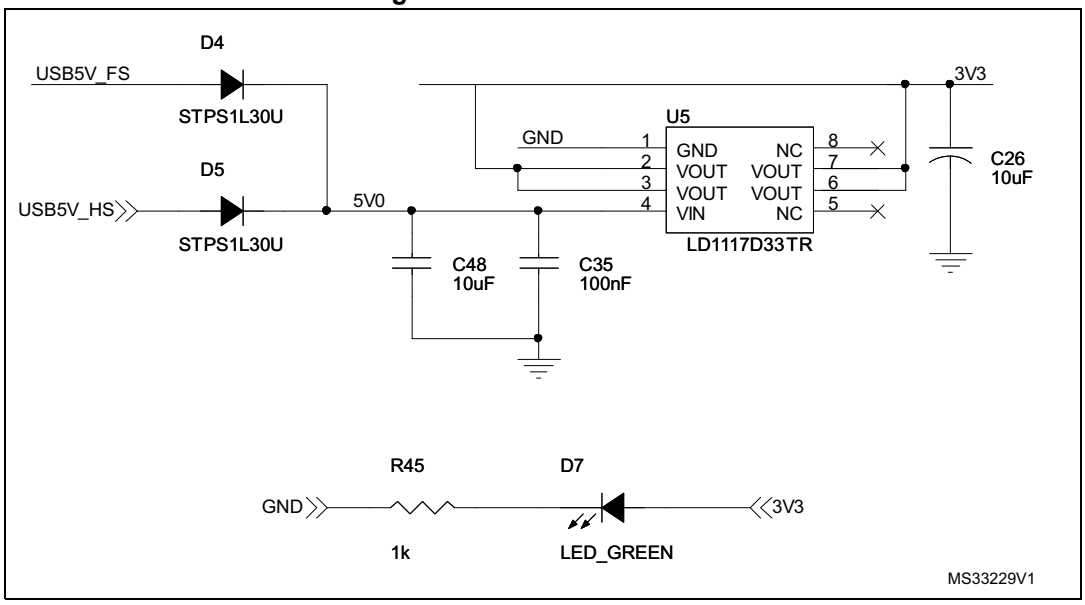

Figure 19. NAND Flash schematic

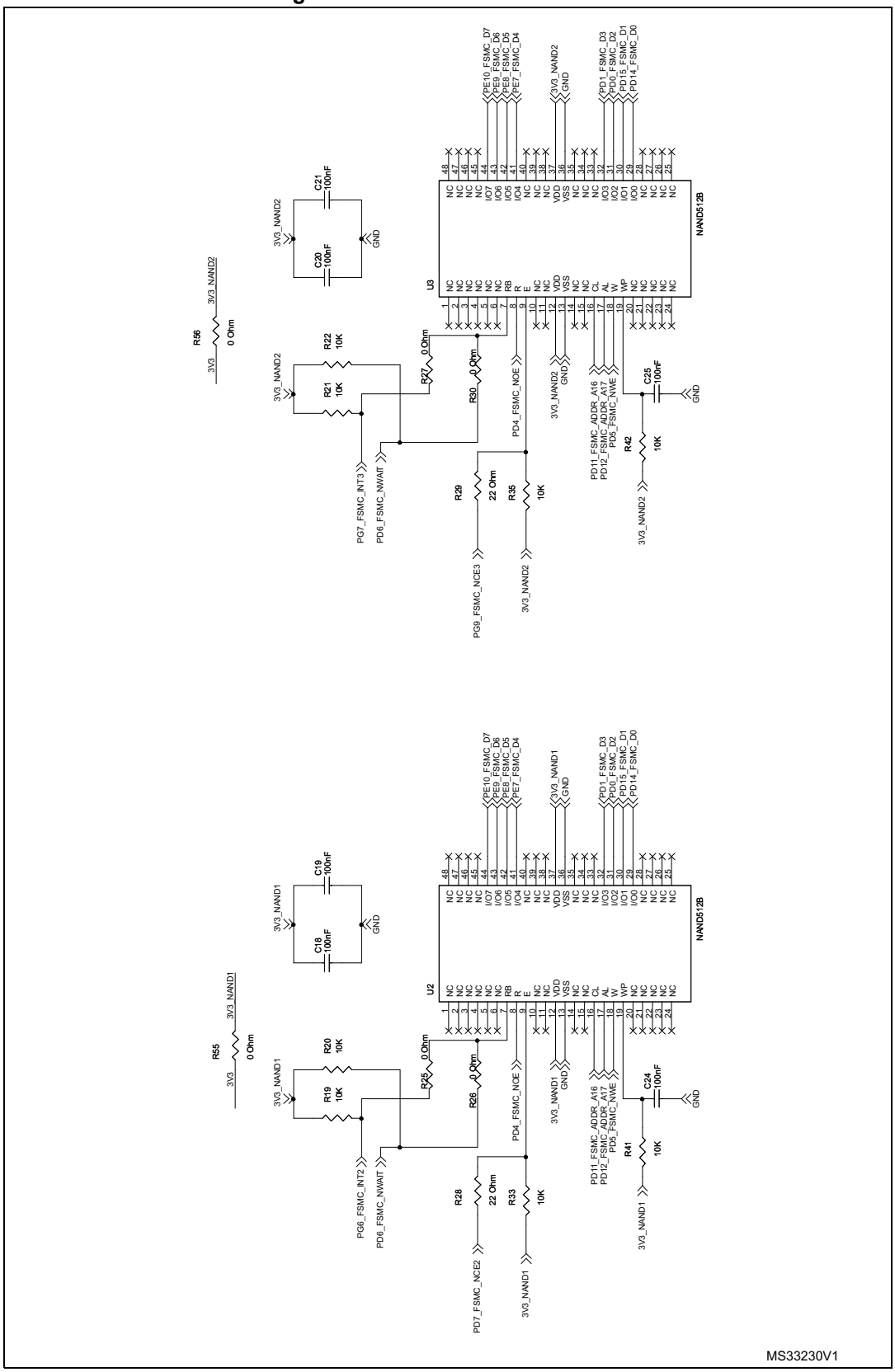

Figure 20. NAND Flash Signals schematic

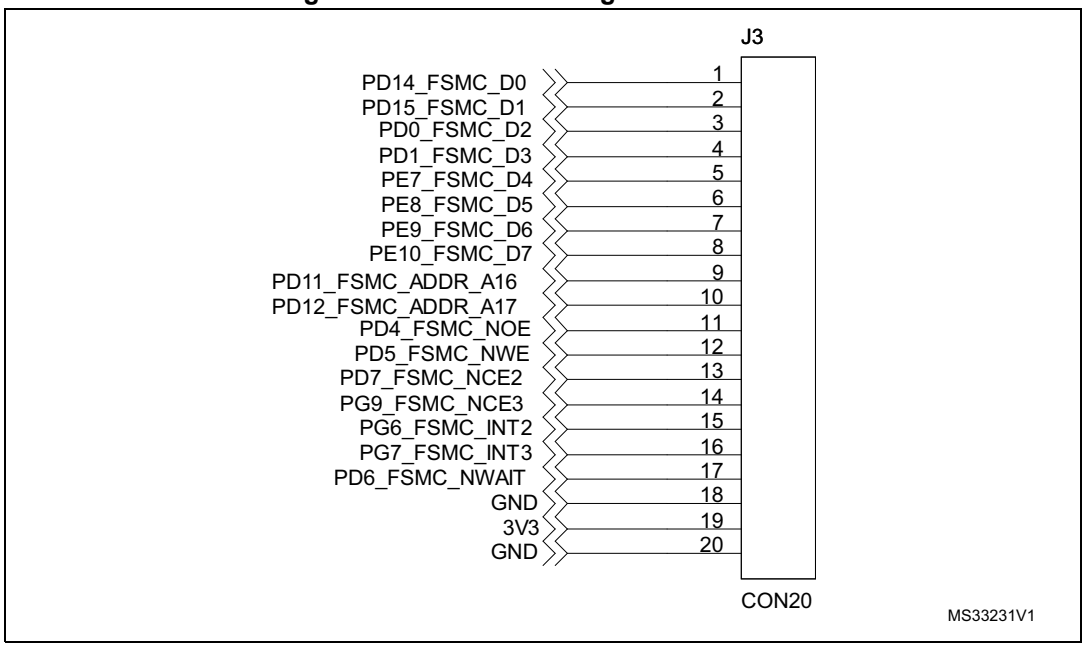

Figure 21. JTAG schematic

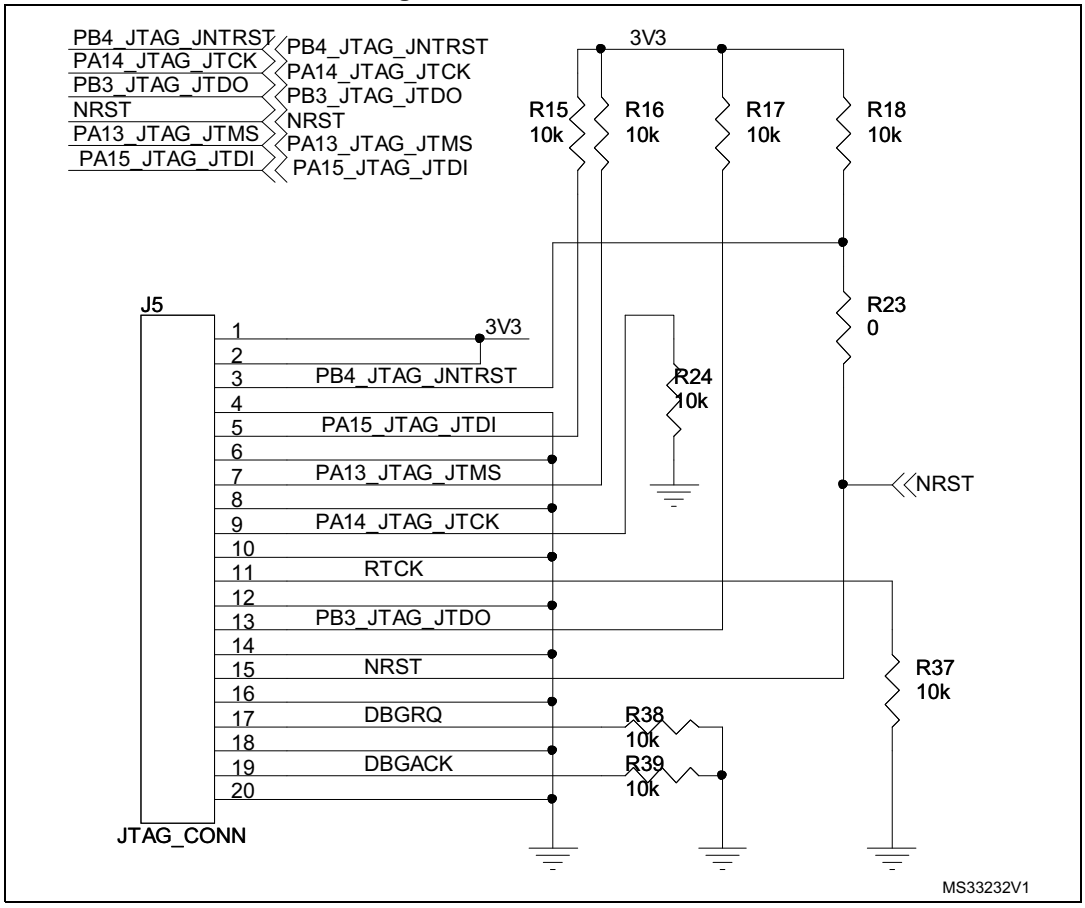

3.3 NAND evaluation board images

Figure 22. Top side of PCB

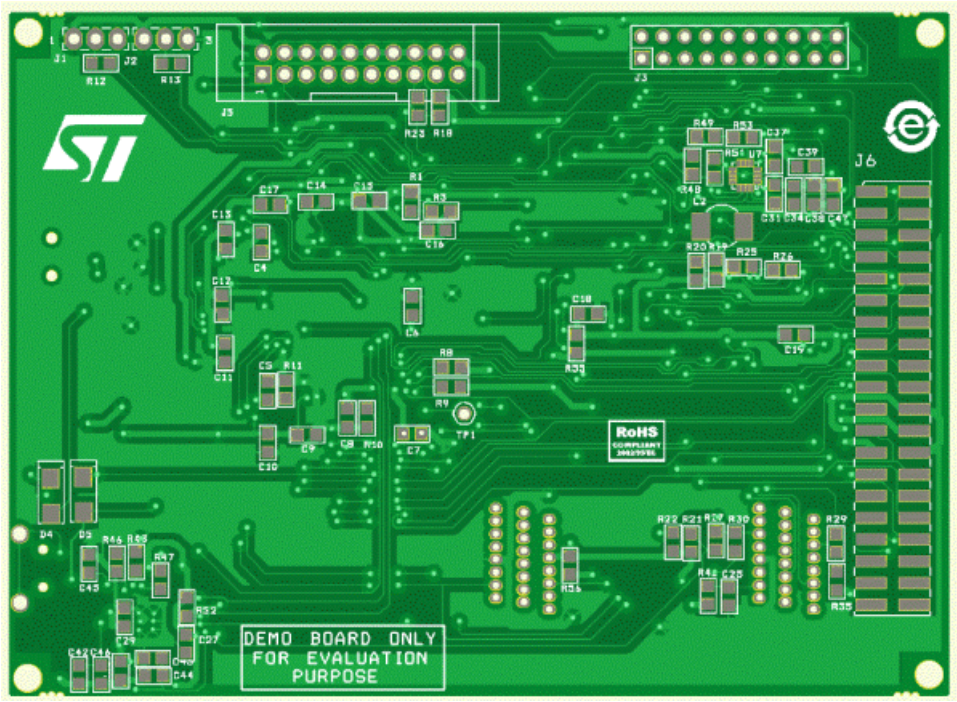

Figure 23. Bottom side of PCB

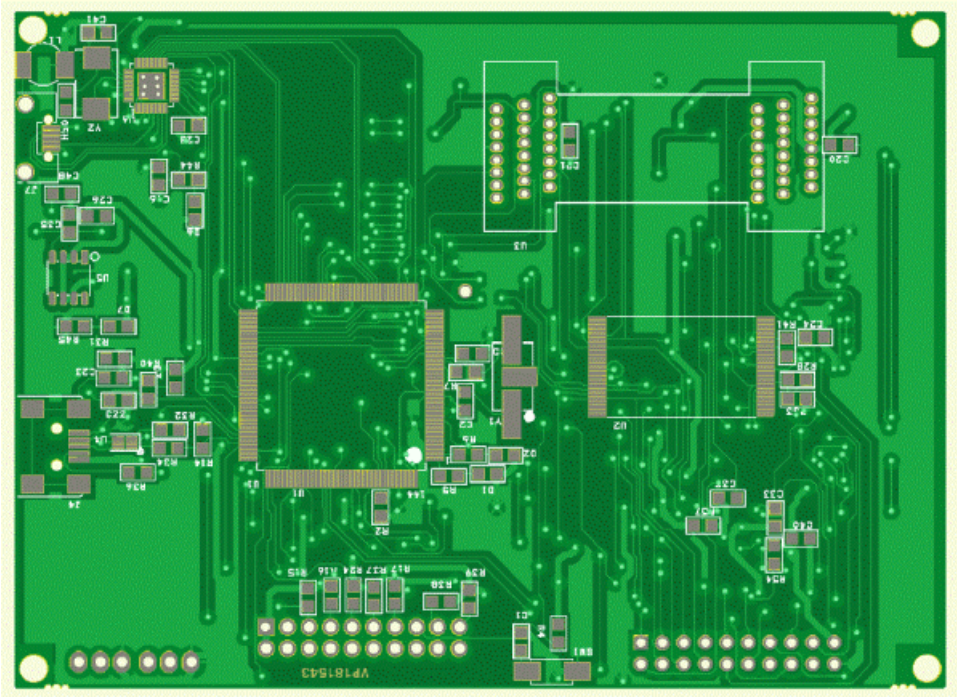

4 Revision history

Table 58. Document revision history

Date	Revision	Changes
28-Nov-2013	1	Initial release.

Please Read Carefully:

Information in this document is provided solely in connection with ST products. STMicroelectronics NV and its subsidiaries (“ST”) reserve the right to make changes, corrections, modifications or improvements, to this document, and the products and services described herein at any time, without notice.

All ST products are sold pursuant to ST’s terms and conditions of sale.

Purchasers are solely responsible for the choice, selection and use of the ST products and services described herein, and ST assumes no liability whatsoever relating to the choice, selection or use of the ST products and services described herein.

No license, express or implied, by estoppel or otherwise, to any intellectual property rights is granted under this document. If any part of this document refers to any third party products or services it shall not be deemed a license grant by ST for the use of such third party products or services, or any intellectual property contained therein or considered as a warranty covering the use in any manner whatsoever of such third party products or services or any intellectual property contained therein.

UNLESS OTHERWISE SET FORTH IN ST’S TERMS AND CONDITIONS OF SALE ST DISCLAIMS ANY EXPRESS OR IMPLIED WARRANTY WITH RESPECT TO THE USE AND/OR SALE OF ST PRODUCTS INCLUDING WITHOUT LIMITATION IMPLIED WARRANTIES OF MERCHANTABILITY, FITNESS FOR A PARTICULAR PURPOSE (AND THEIR EQUIVALENTS UNDER THE LAWS OF ANY JURISDICTION), OR INFRINGEMENT OF ANY PATENT, COPYRIGHT OR OTHER INTELLECTUAL PROPERTY RIGHT.

ST PRODUCTS ARE NOT DESIGNED OR AUTHORIZED FOR USE IN: (A) SAFETY CRITICAL APPLICATIONS SUCH AS LIFE SUPPORTING, ACTIVE IMPLANTED DEVICES OR SYSTEMS WITH PRODUCT FUNCTIONAL SAFETY REQUIREMENTS; (B) AERONAUTIC APPLICATIONS; (C) AUTOMOTIVE APPLICATIONS OR ENVIRONMENTS, AND/OR (D) AEROSPACE APPLICATIONS OR ENVIRONMENTS. WHERE ST PRODUCTS ARE NOT DESIGNED FOR SUCH USE, THE PURCHASER SHALL USE PRODUCTS AT PURCHASER’S SOLE RISK, EVEN IF ST HAS BEEN INFORMED IN WRITING OF SUCH USAGE, UNLESS A PRODUCT IS EXPRESSLY DESIGNATED BY ST AS BEING INTENDED FOR “AUTOMOTIVE, AUTOMOTIVE SAFETY OR MEDICAL” INDUSTRY DOMAINS ACCORDING TO ST PRODUCT DESIGN SPECIFICATIONS. PRODUCTS FORMALLY ESCC, QML OR JAN QUALIFIED ARE DEEMED SUITABLE FOR USE IN AEROSPACE BY THE CORRESPONDING GOVERNMENTAL AGENCY.

Resale of ST products with provisions different from the statements and/or technical features set forth in this document shall immediately void any warranty granted by ST for the ST product or service described herein and shall not create or extend in any manner whatsoever, any liability of ST.

ST and the ST logo are trademarks or registered trademarks of ST in various countries.
Information in this document supersedes and replaces all information previously supplied.
The ST logo is a registered trademark of STMicroelectronics. All other names are the property of their respective owners.

© 2013 STMicroelectronics - All rights reserved

STMicroelectronics group of companies

Australia - Belgium - Brazil - Canada - China - Czech Republic - Finland - France - Germany - Hong Kong - India - Israel - Italy - Japan - Malaysia - Malta - Morocco - Philippines - Singapore - Spain - Sweden - Switzerland - United Kingdom - United States of America

www.st.com